Plan for VDG - TKR

- Total estimated time ~ 2 + 10 + 10 = 22 hours (does not include set up time)
- Take cosmics at horizontal position with TKR trigger
  - Take 2 runs of 1 hour of data and Xin and Eduardo will analyze one of the runs within 1 hour
    - Configuration must be recorded in the elog: TACKs, DAC thresholds (TKR and CAL), and GTRC split, event rate, # events, ebf filename
- Shoot photons with no VDG shield on top face of TKR with TKR trigger
  - Take a run with 2 hours of data and Xin and Eduardo will analyze the data in 2 hours and give the go ahead for total of 10 hrs of data taking (assuming TKR trigger rate of 5 Hz)
    - Configuration must be recorded in the elog: TACKs, DAC thresholds (TKR and CAL), and GTRC split, event rate, # events, ebf filename
- Shoot photons from an angle of 135 (impinging on the bottom of tracker) with TKR trigger
  - Take a run with 2 hours of data and Xin and Eduardo will analyze the data in 2 hours and give the go ahead for total of 10 hrs of data taking (assuming TKR trigger rate of 3 Hz)
    - Configuration must be recorded in the elog: TACKs, DAC thresholds (TKR and CAL), and GTRC split, event rate, # events, ebf filename

Plan for VDG – CAL

- Total time estimated ~ 3 hours (does not include set up time)
- Shoot photons with no VDG shield on side of CAL
  - Take 1 hr data at nominal DAC values for CAL with CAL_LO (expect about 50 Hz).
    - Configuration must be recorded in the elog: TACKs, DAC thresholds (TKR and CAL), and GTRC split, event rate, # events, ebf filename
  - Take 1 hr data at 4MeV/crystal for CAL using CAL_LO (not sure what will happen with the rate).
    - Configuration must be recorded in the elog: TACKs, DAC thresholds (TKR and CAL), and GTRC split, event rate, # events, ebf filename
  - Take 1 hr data at 4MeV/crystal for CAL using CAL_LO (not sure what will happen with the rate) and zero suppression one range only.
    - Configuration must be recorded in the elog: TACKs, DAC thresholds (TKR and CAL), and GTRC split, event rate, # events, ebf filename

Configurations

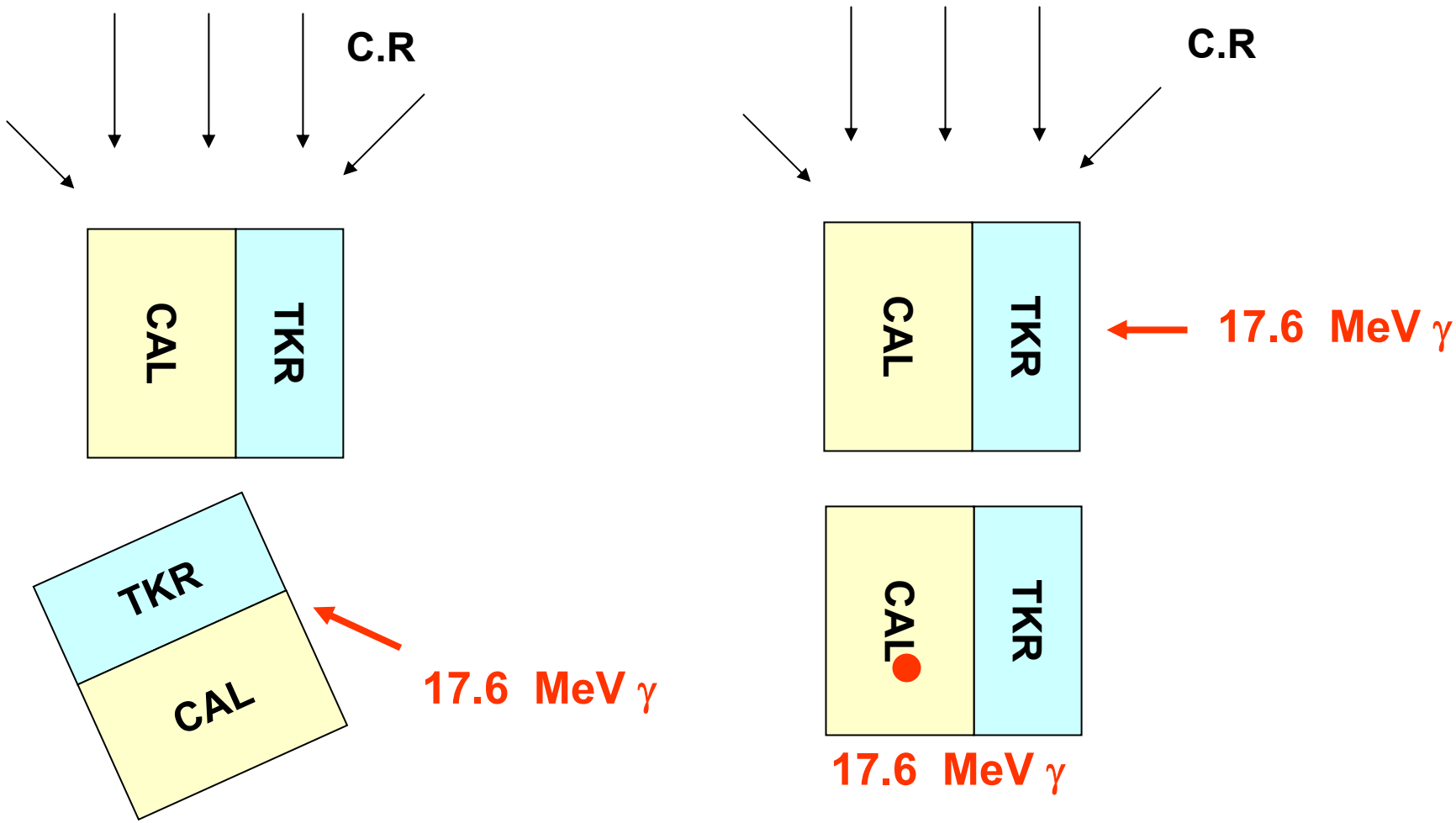

Need a tape measurement of XYZ of the entry point of photons with respect to some fiducial, (~0.5 cm accuracy is fine) and please log the numbers with every run taken under that configuration