GLAST Large Area Telescope:

MGSE Design / Status Review

BACK – UP SLIDES

Eric Gawehn
SU-SLAC
LAT I&T MGSE Dept. Manager

egawehn@slac.stanford.edu
650 – 926 – 3622 Office
650 – 796 – 2576 Cell

LAT MGSE Review – Hdwr List

- Z Axis Vertical Lift Fixture

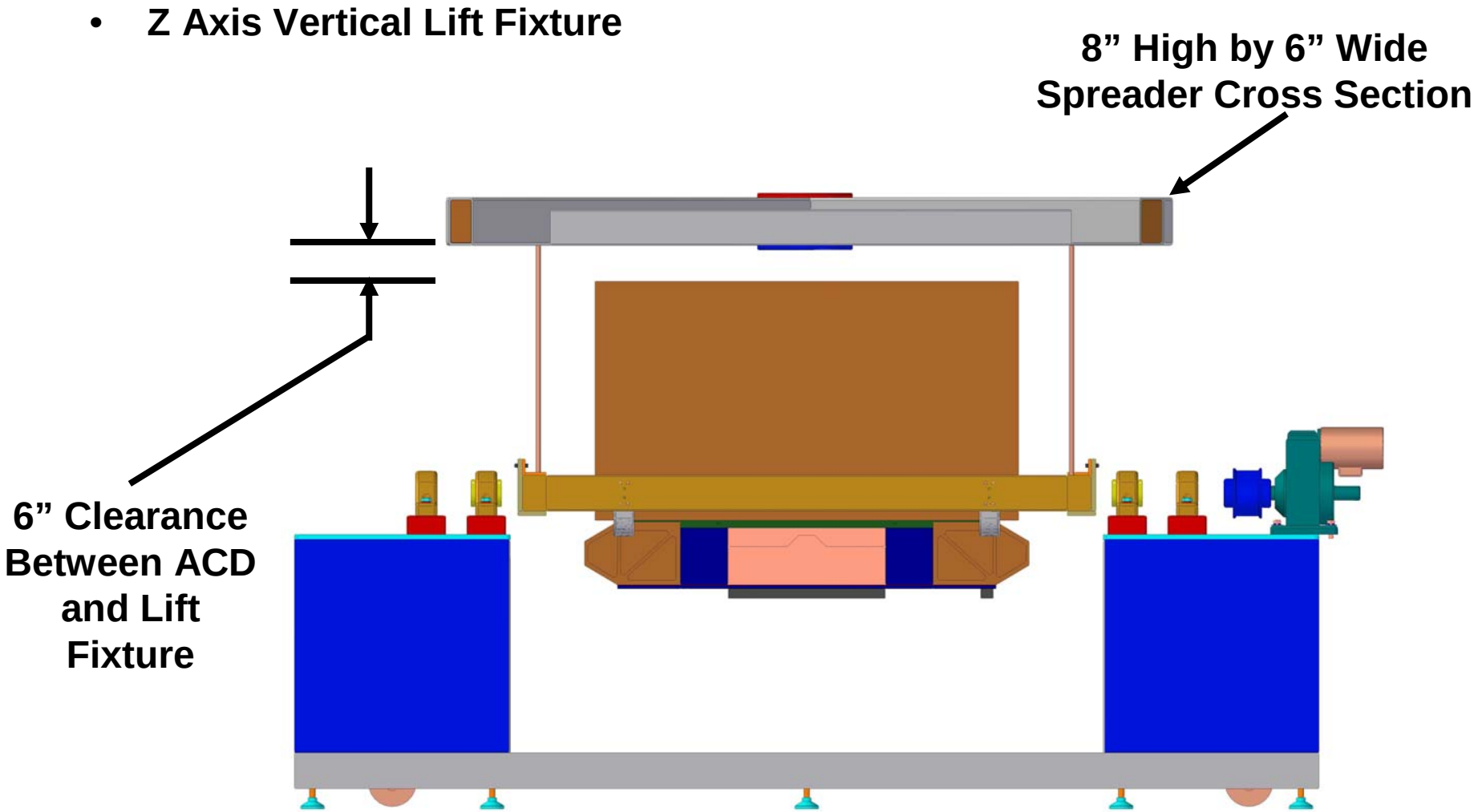

CDR Rotation Stand Concept; Same Rotation Axis Height as PAP Stand

LAT MGSE Review – Hdwr List

- **Z Axis Horizontal Lift Spreader**

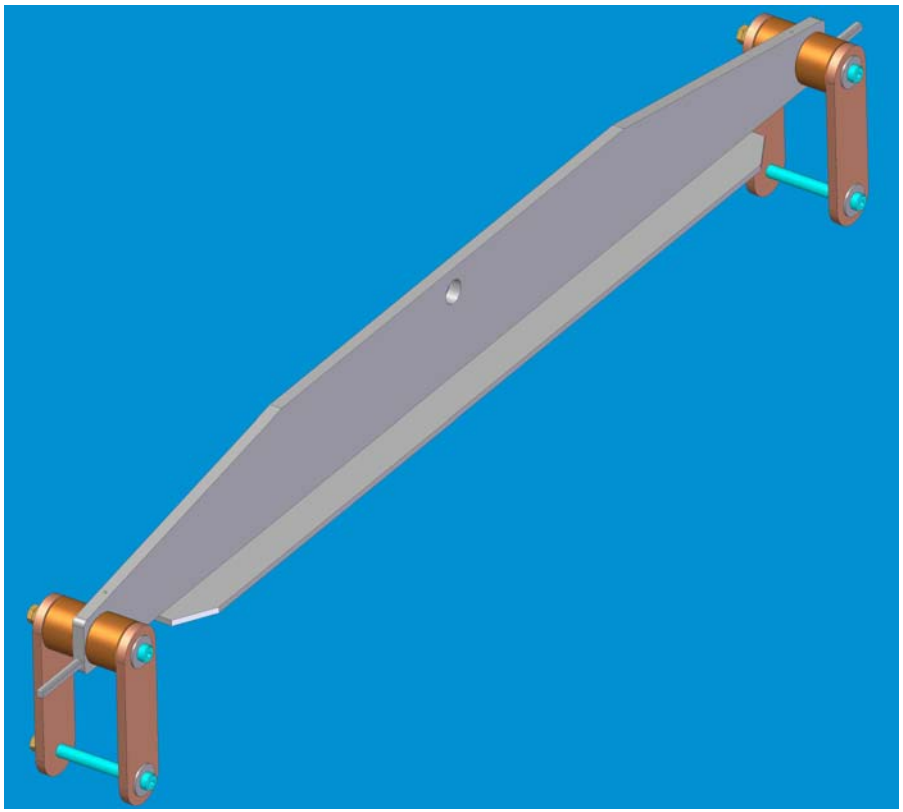

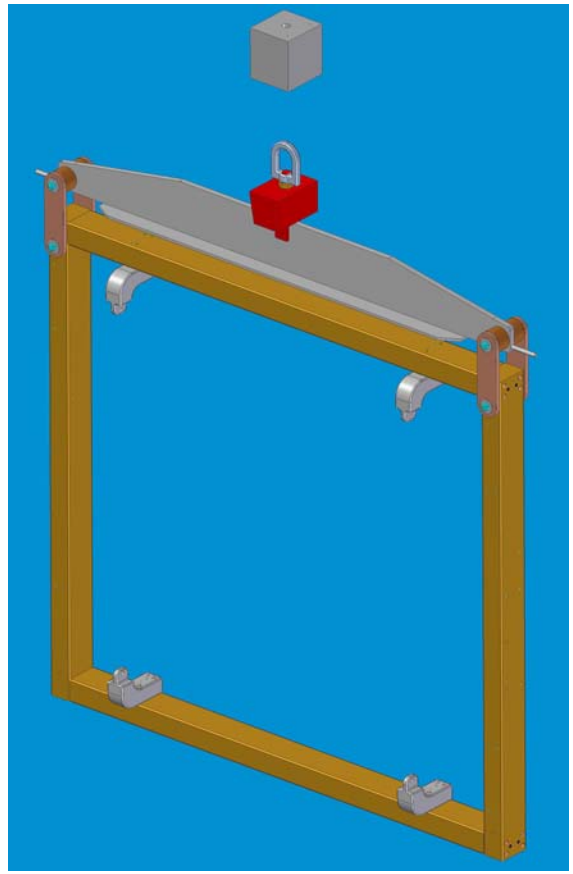

LAT MGSE Review – Hdwr List

- **GPR Corner Attach Design**
  - **Same concept used for GPR to Grid Attach Brackets and for T-Vac Stand**

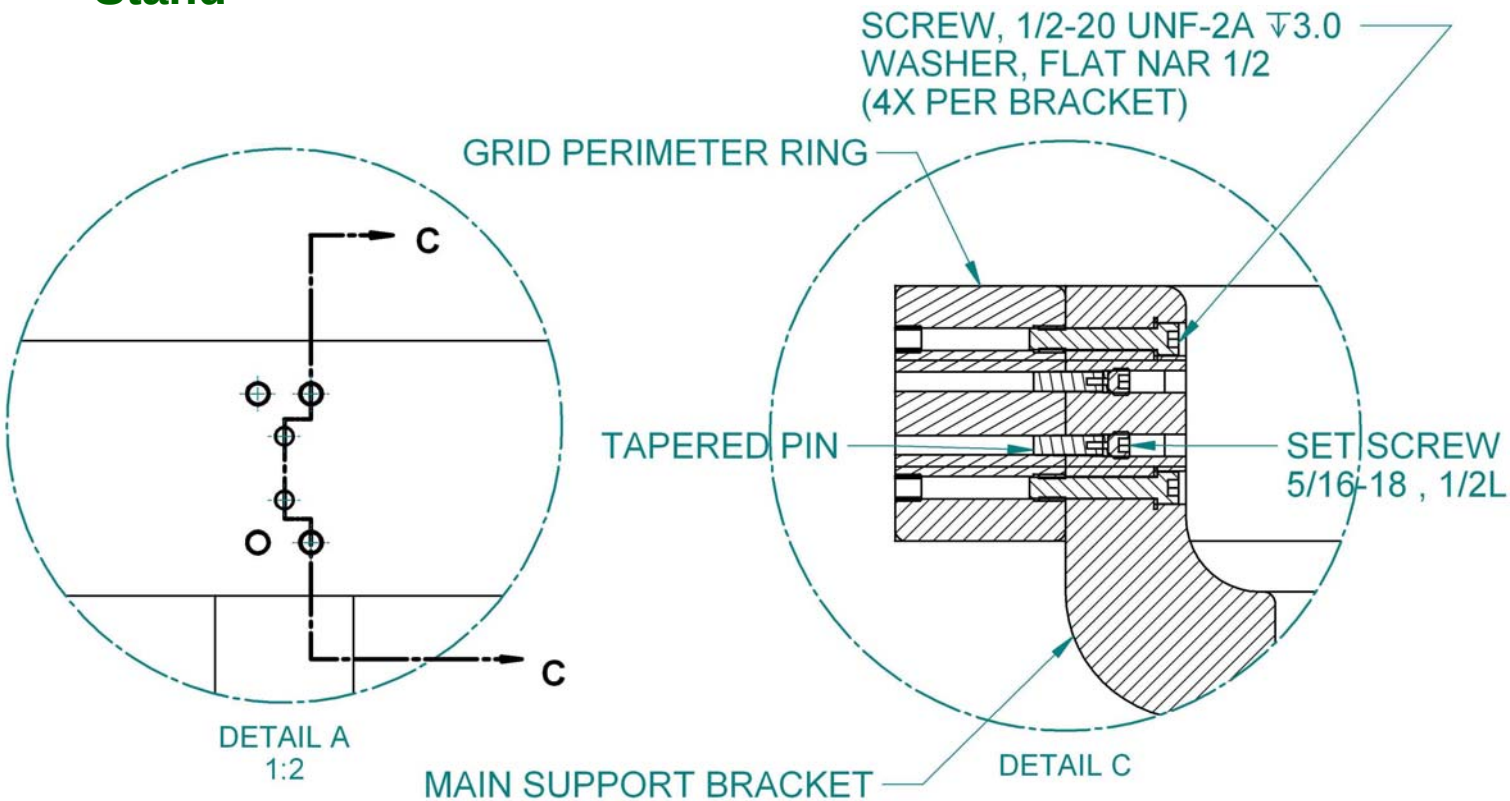

ACD Installation, Low Profile Integration Stand

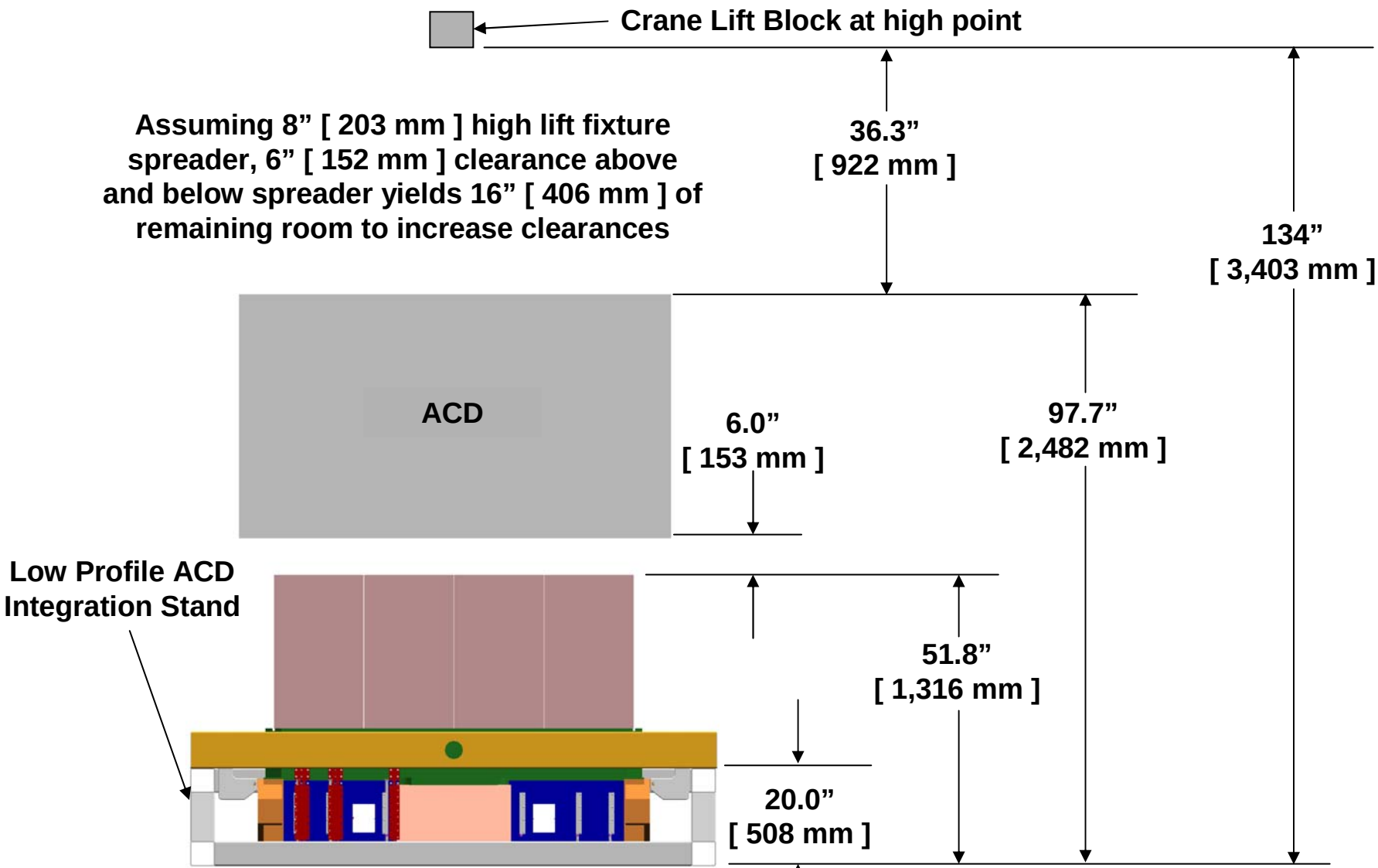

Back-Up Charts

LAT With ACD To / From Rotation Stand

- Crane lift block maximum height is 134 inches [3,403 mm] (Hook removed)
  - No problem moving LAT to / from integration stand
  - 15” [381 mm] available room for clearance management
    - Can existing Crane Scale fit ?

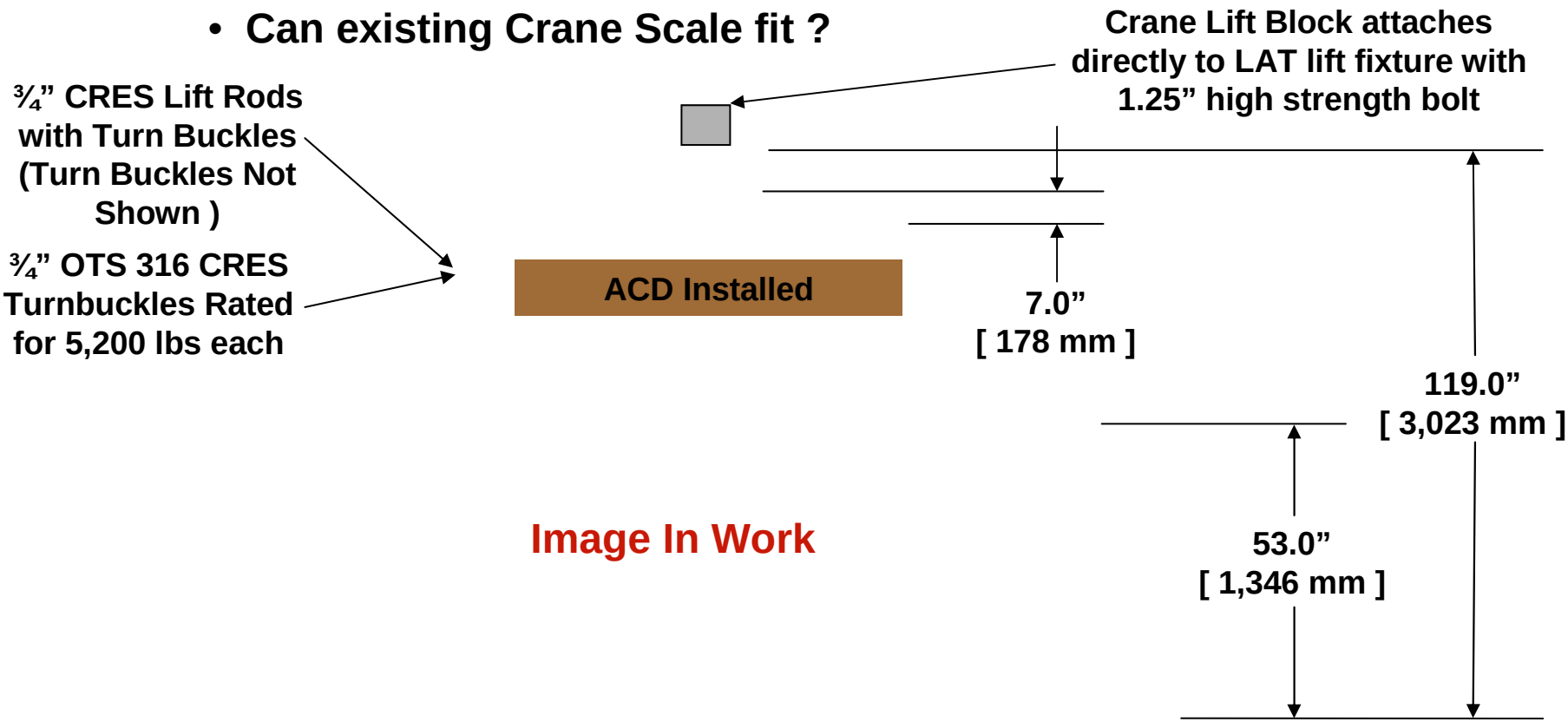

Image In Work

LAT Rotation Stand (Prior Concept)

- Interference between Heater Control Box Connector and GPR Bracket
  - Nearly resolved

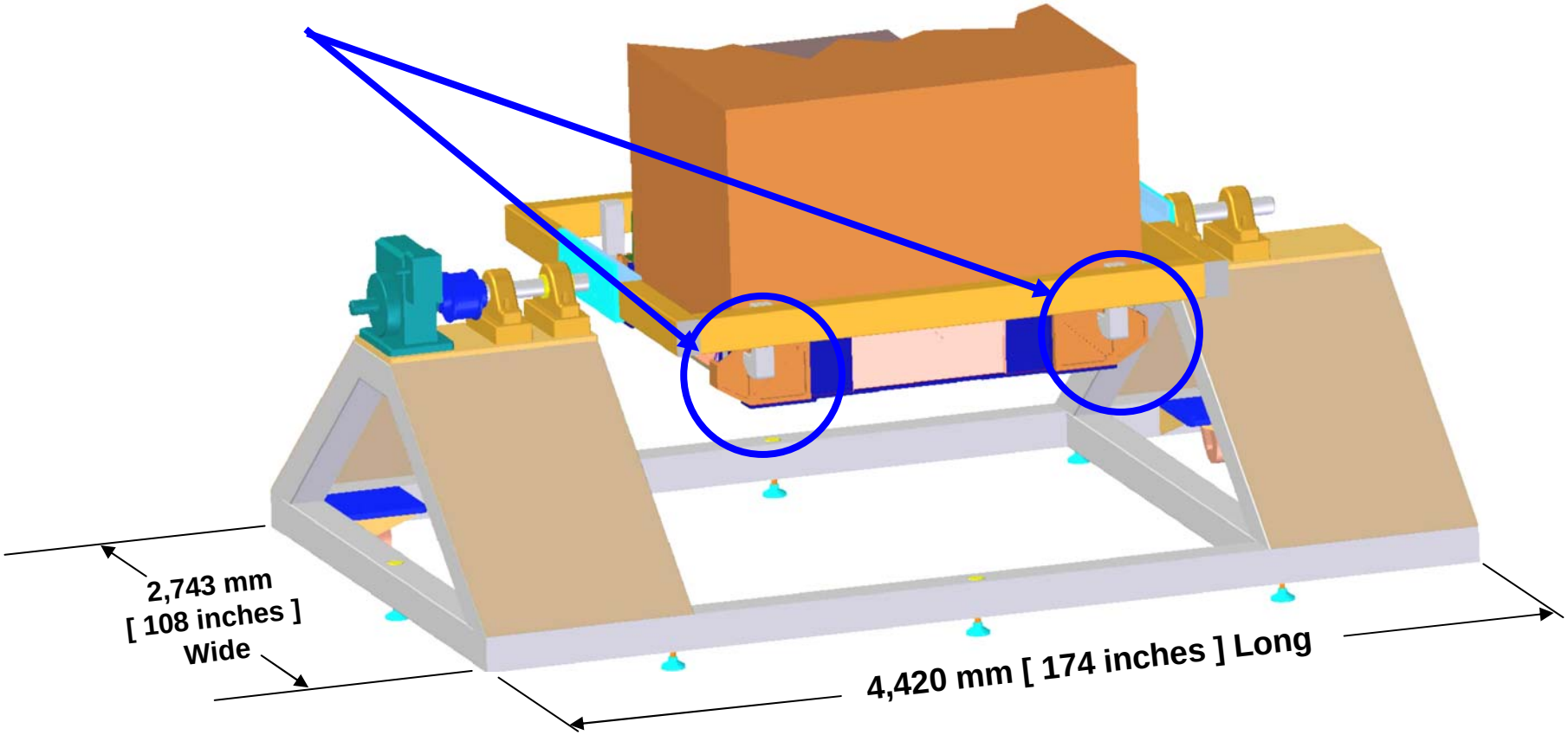

Note: View with prior Stand acceptable since New Design with PAP is similar enough for this discussion

Heater Control Box Connector Clearance

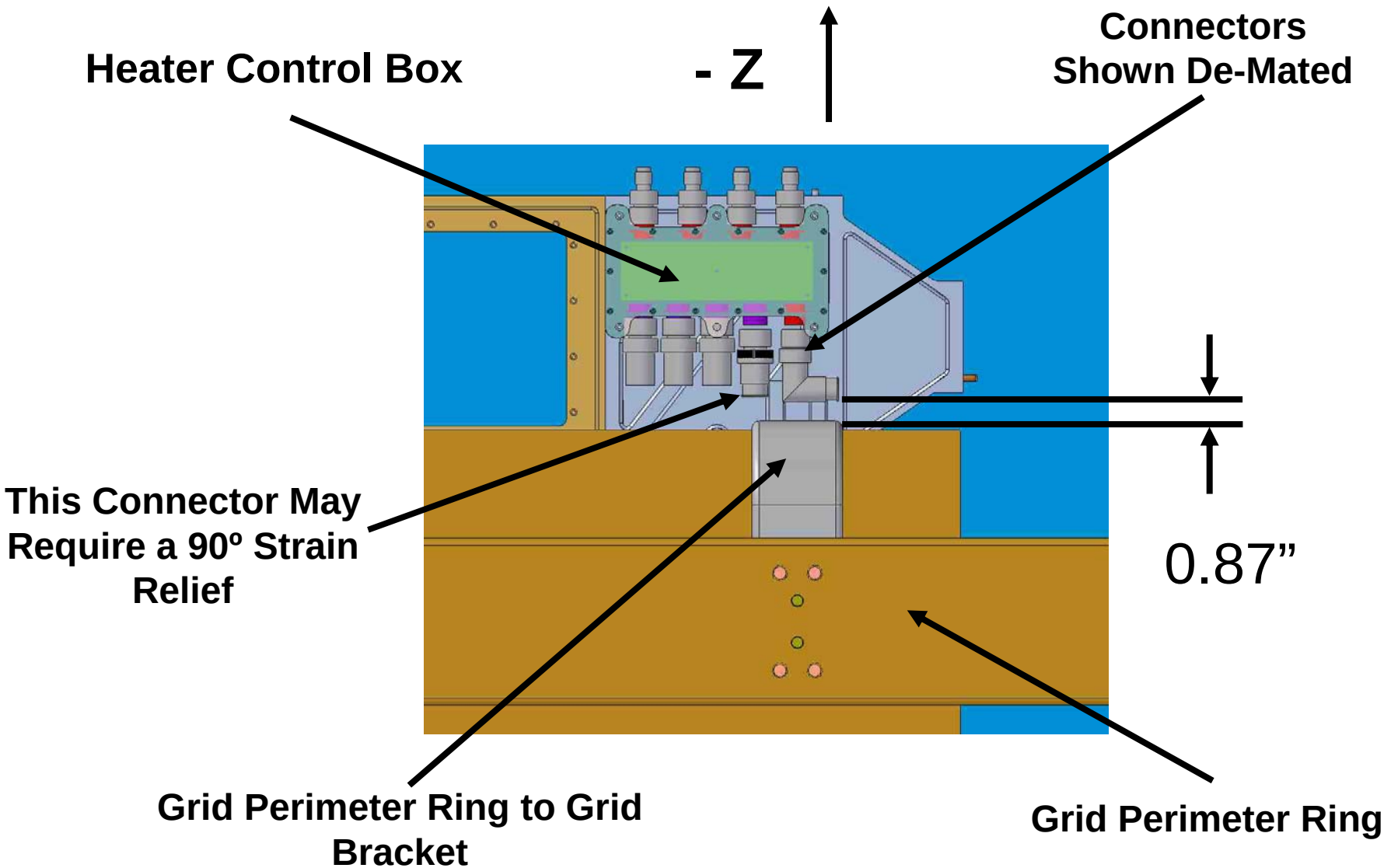

GPR with Heater Control Box Side View

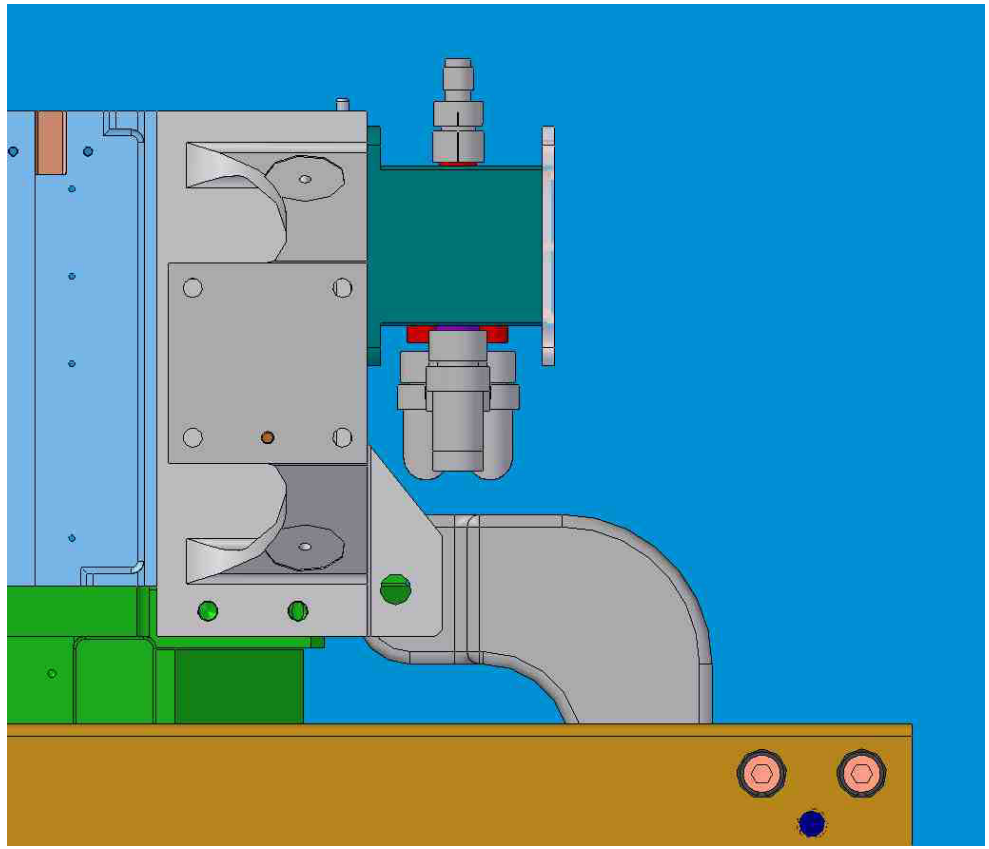

A-Frame Rotation Stand with Low Cost PAP*

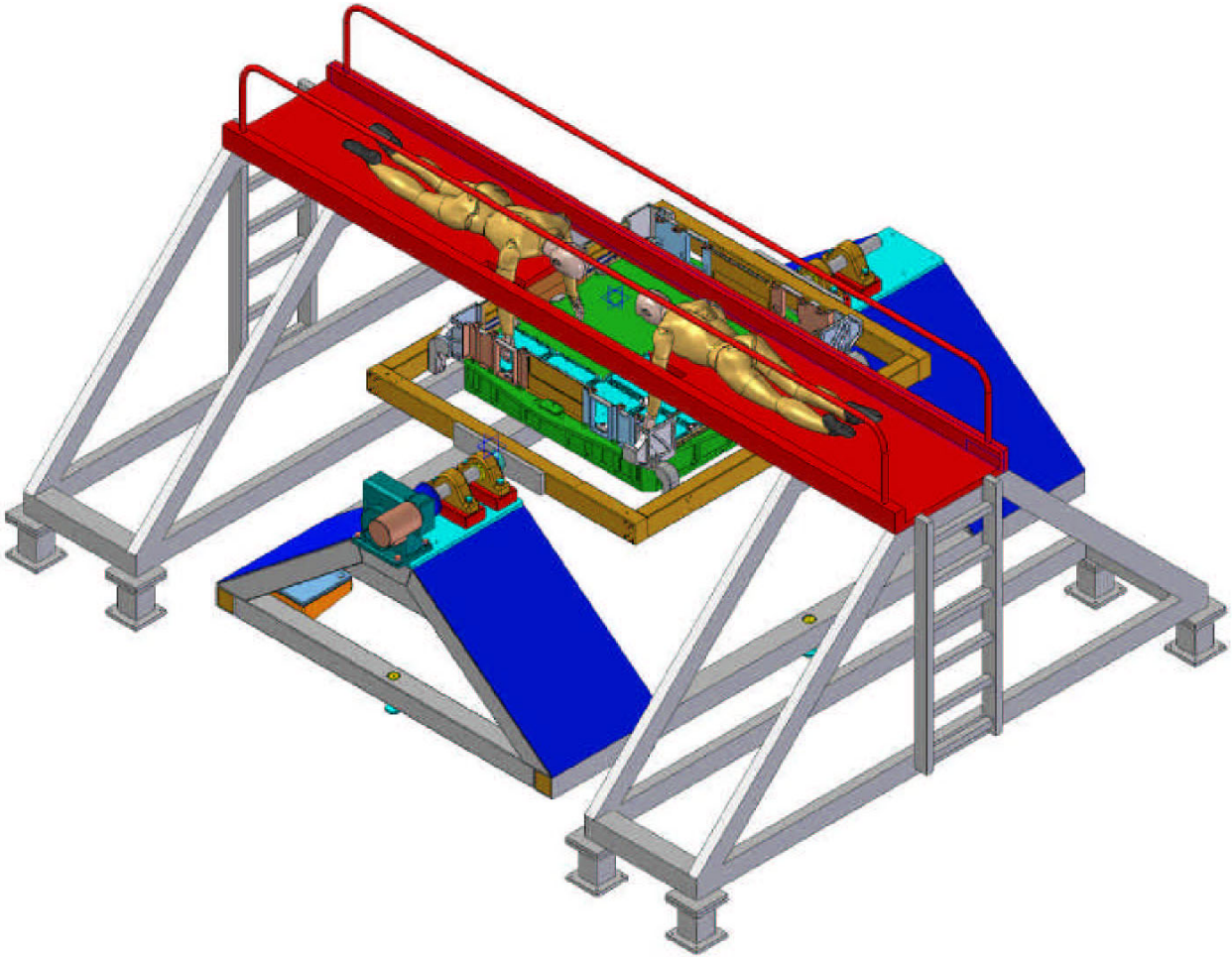

* PAP – Pesonnel Access Platform

A-Frame Rotation Stand with Low Cost PAP*

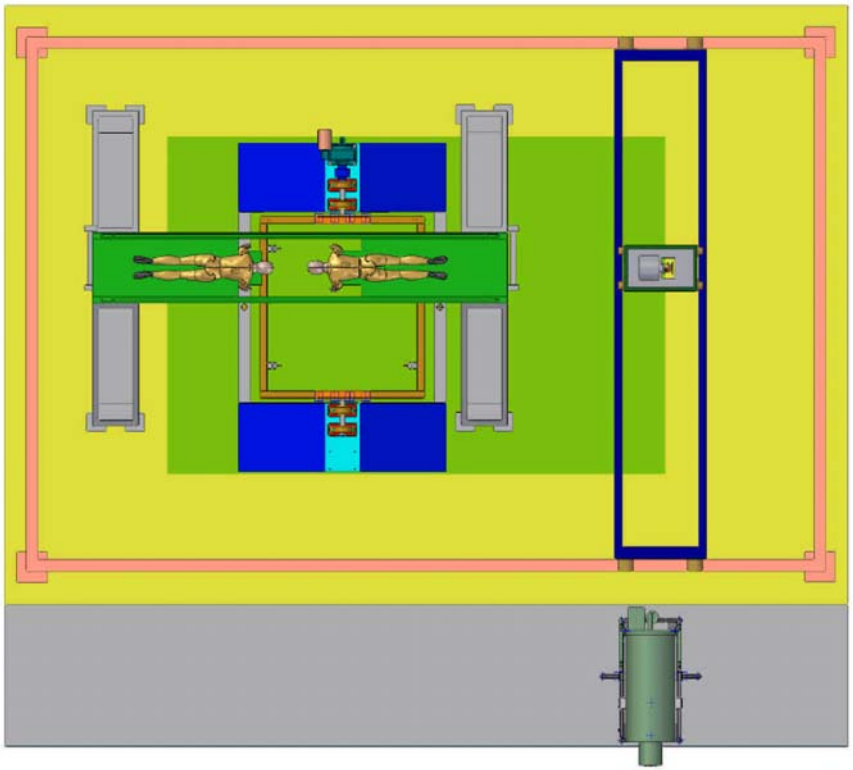

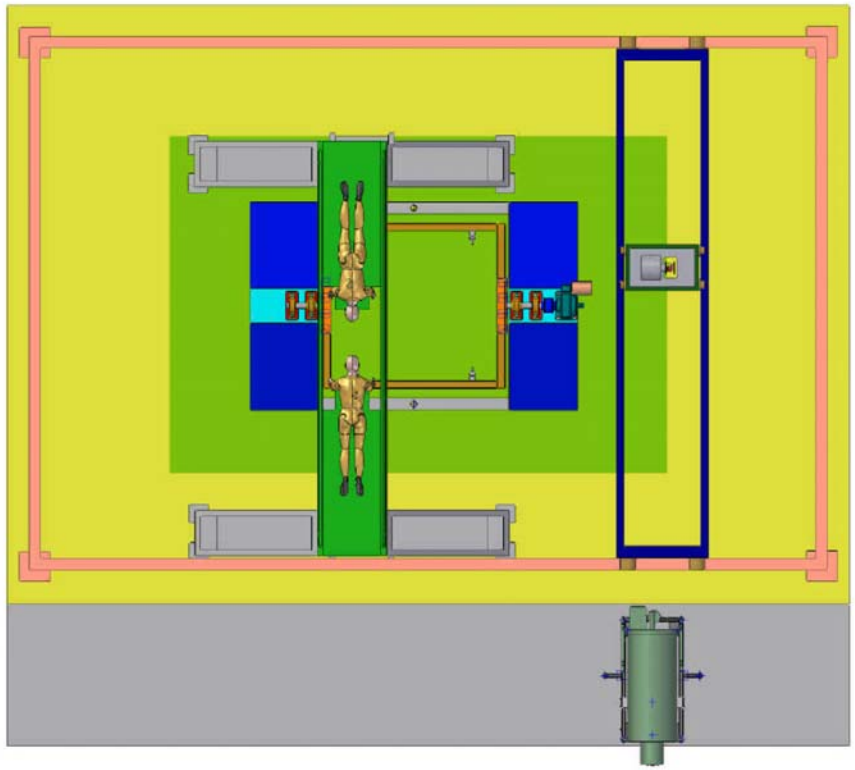

A-Frame Rotation Stand with Low Cost PAP*

Crane Structure is NOT Modeled Correctly – One Man Week to Rebuild Model

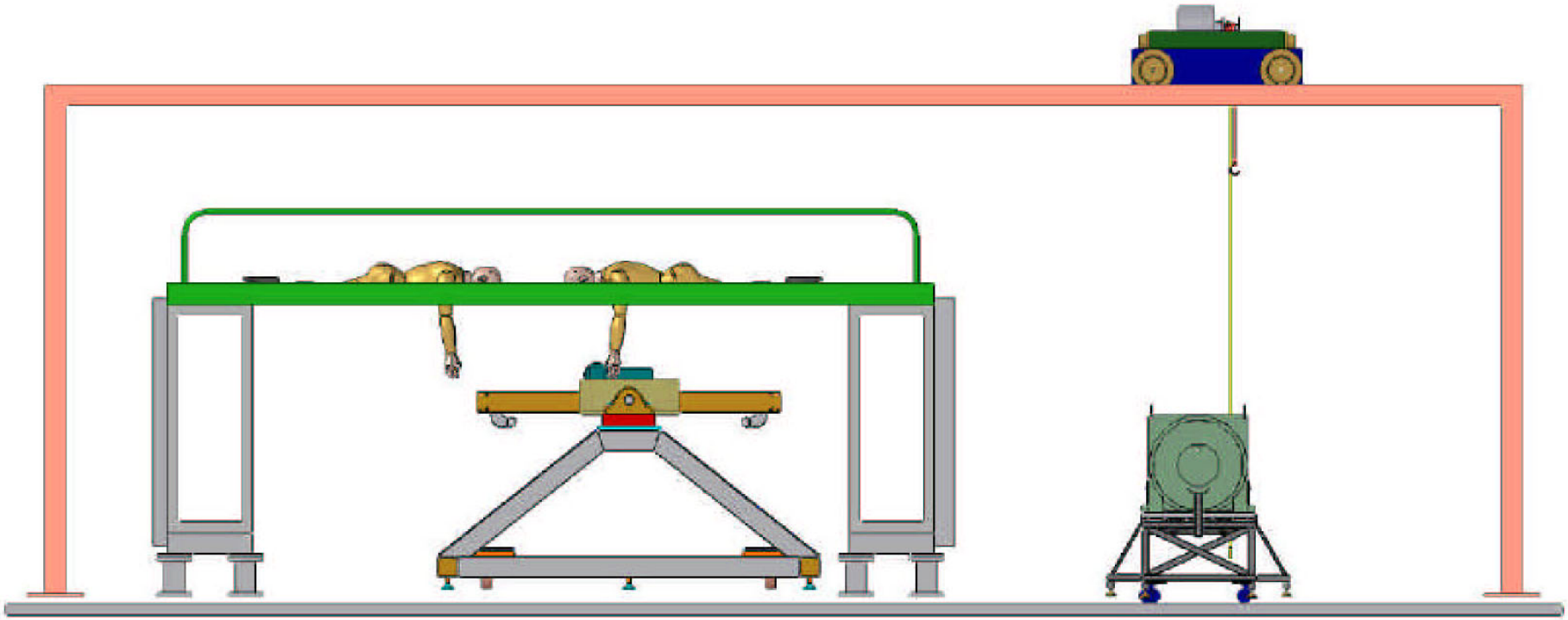

A-Frame LAT Stand with Low Cost PAP

Top Looking Down View

B-33, Rm 104 Integration Hall

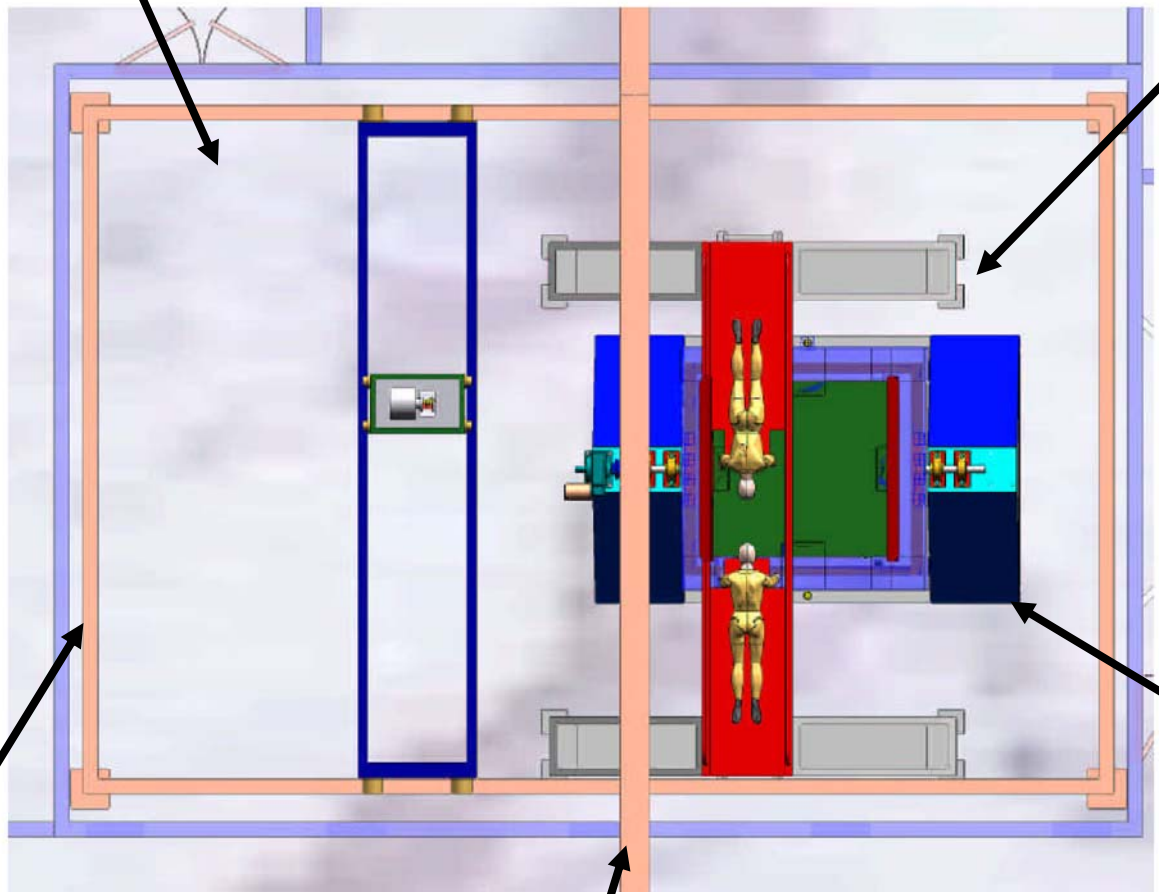

Low Cost Stand Takes Up Most of the Rm

Needs Updated Image

Image in work

Crane Structure

B-33 Beam; Not in Rm

LAT A-Frame Integration Stand

Back-Up Charts

Refined Rotation Stand with PAP

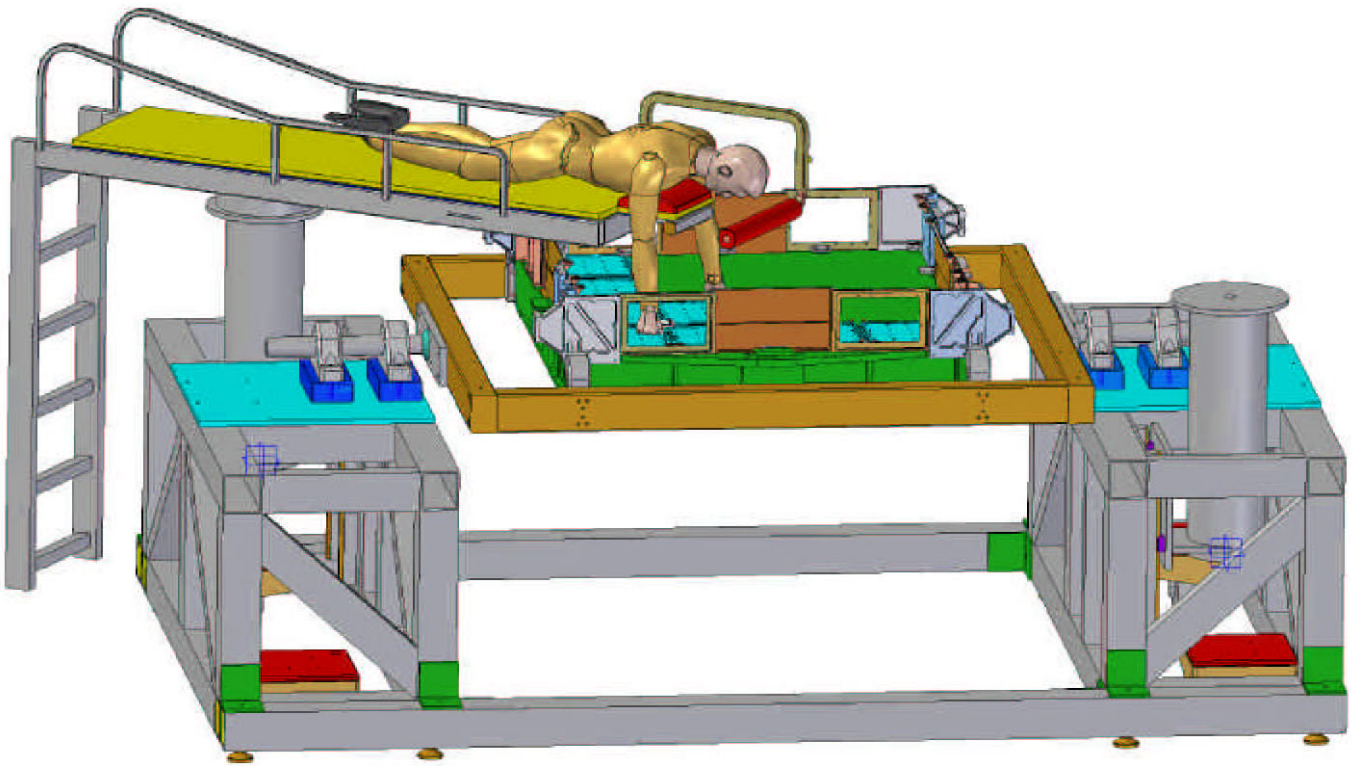

Needs Updated Image;
Image in work

Box Frame Stand with PAP, Small

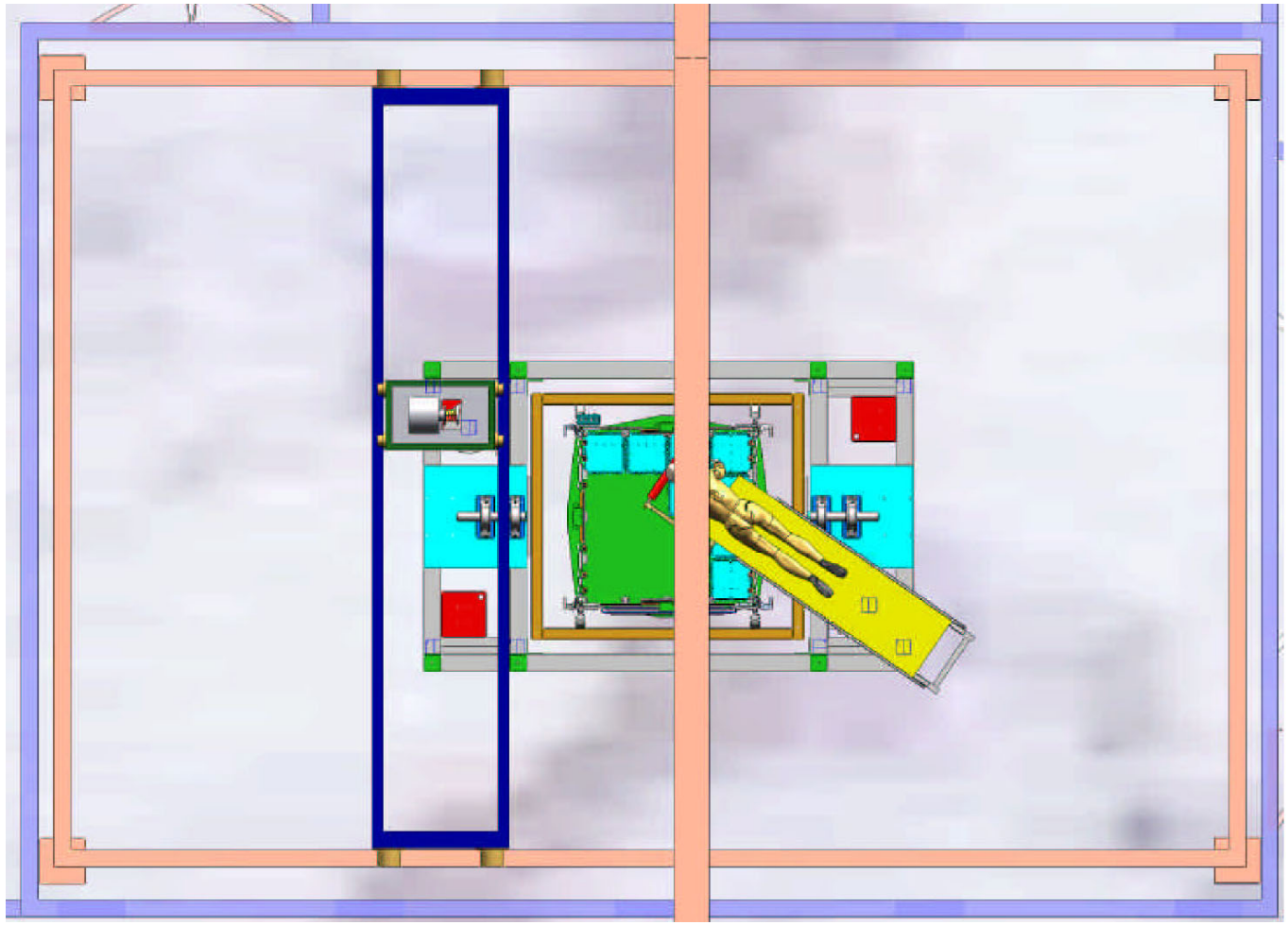

Needs Updated Image; Image in work

Back-Up Charts

A Frame Stand with PAP, Small

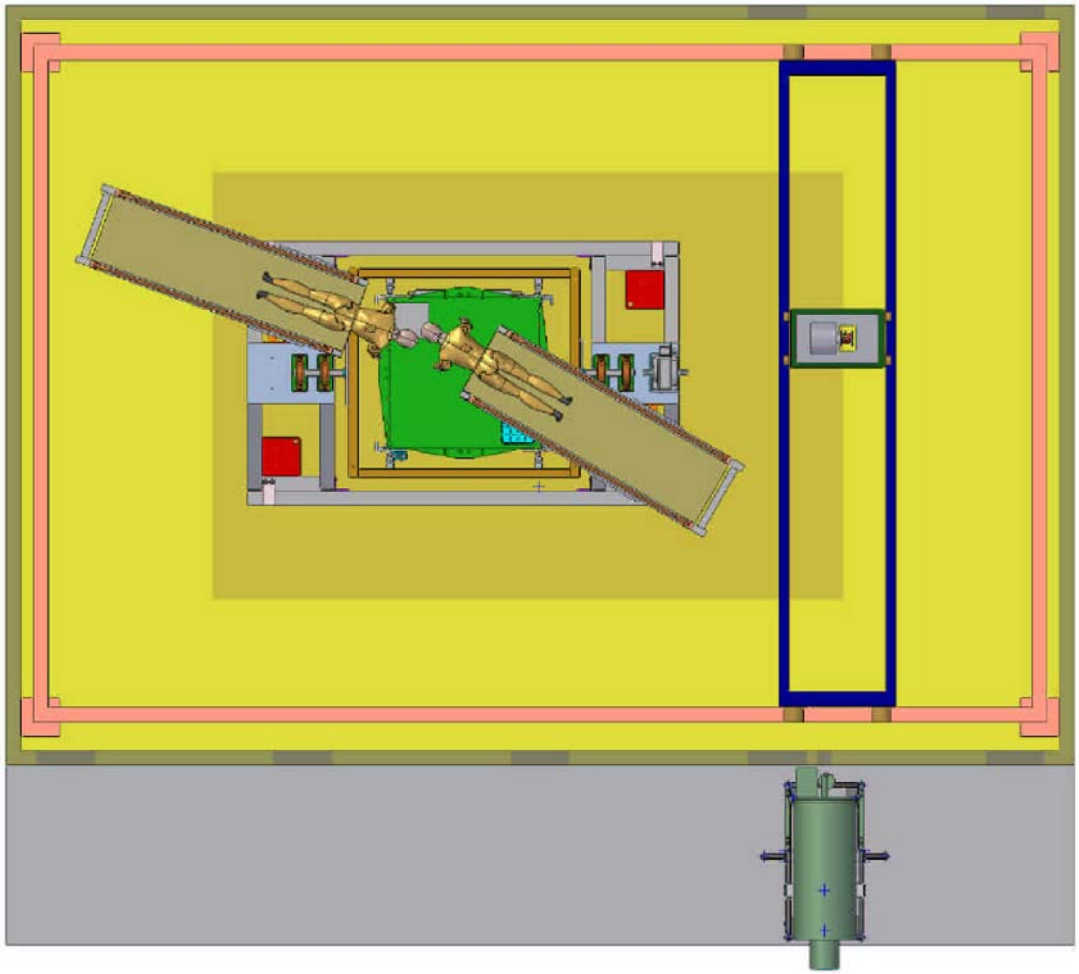

A Frame Stand with PAP, Small

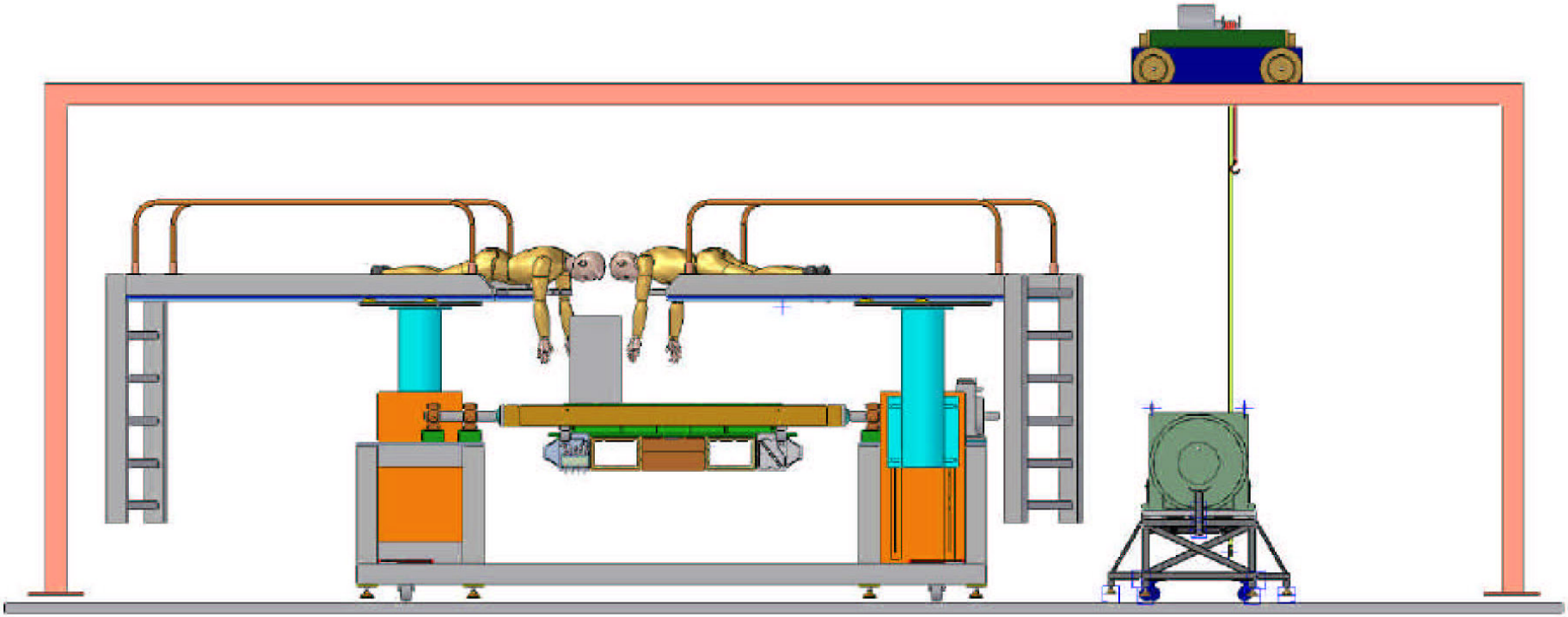

A Frame Stand with PAP, Small

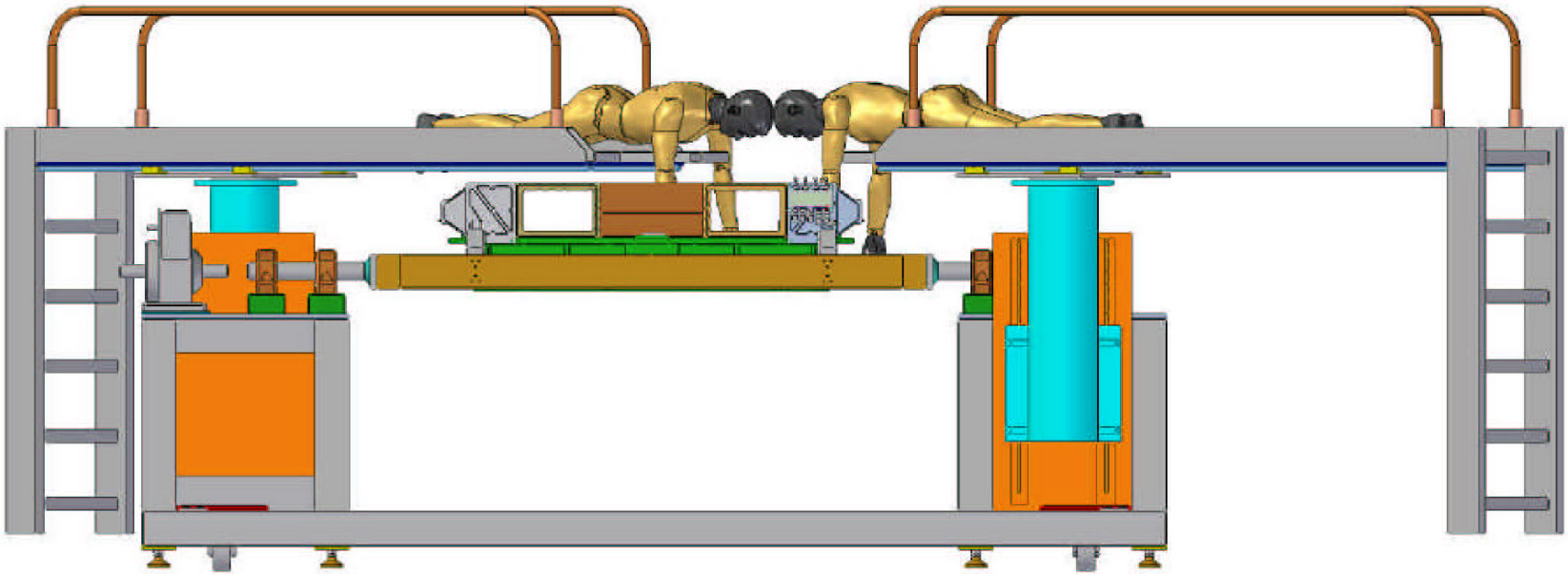

A Frame Stand with PAP, Small

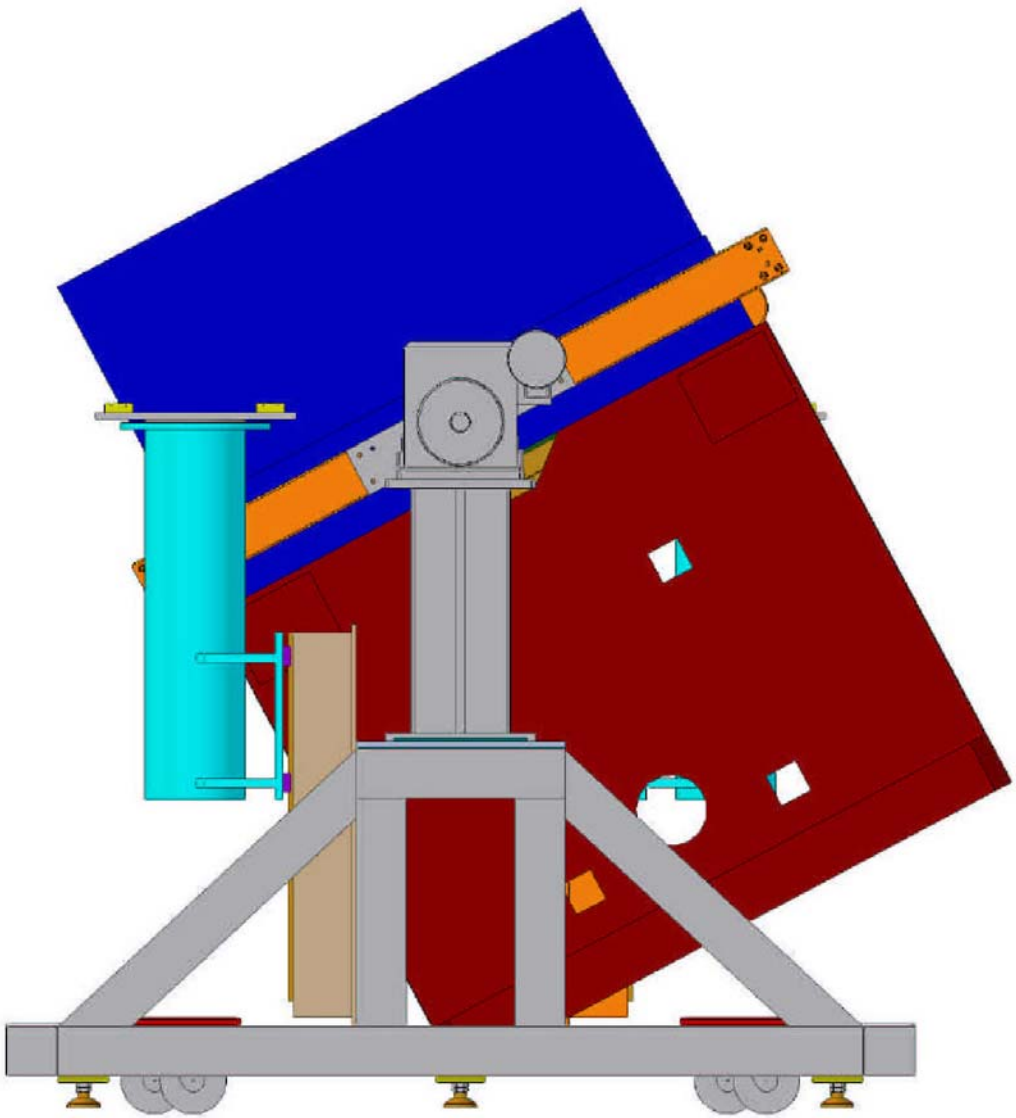

A Frame Stand with PAP, Small

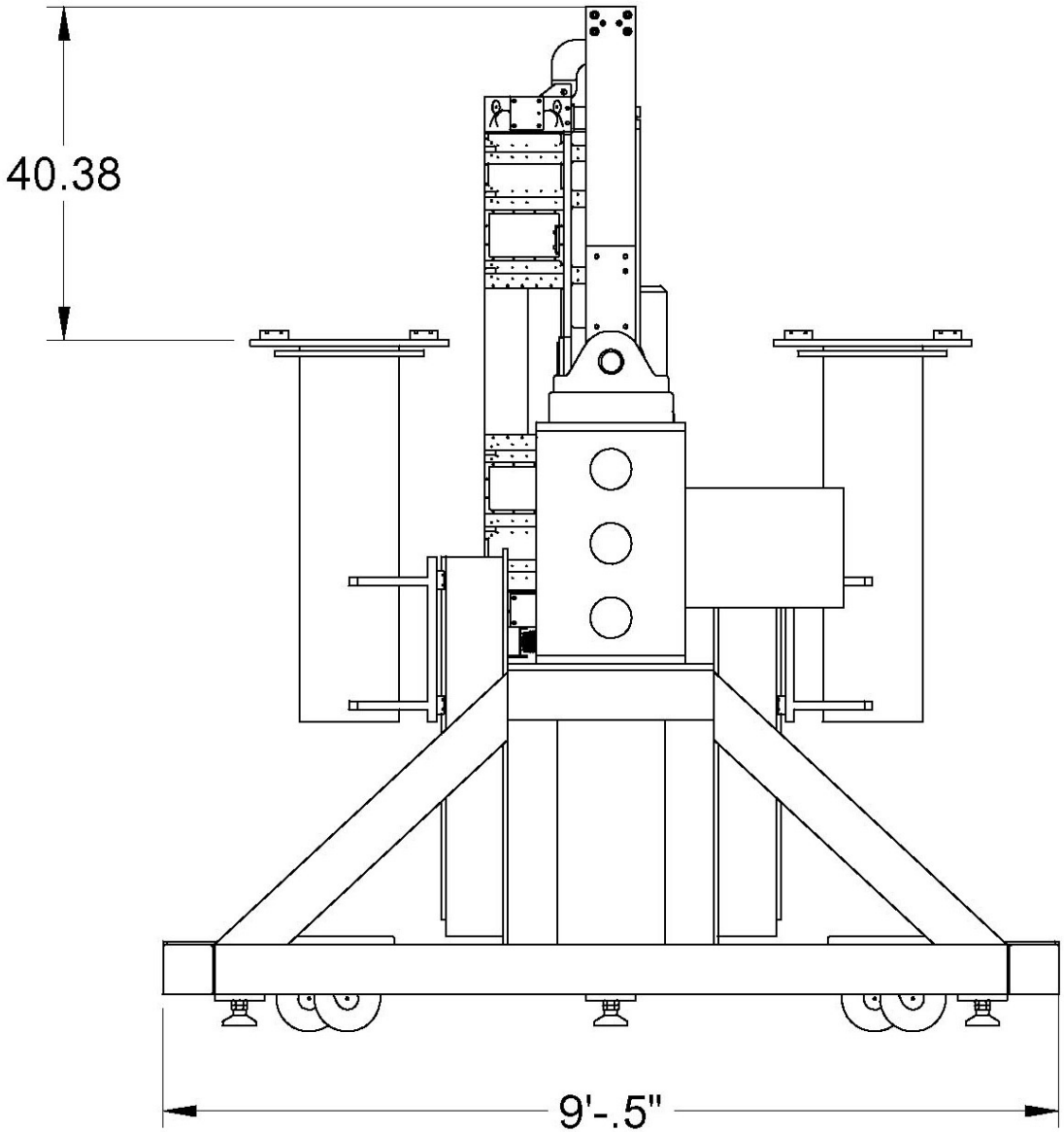

LAT Support Shaft / Flange Assys

- Fabricated of 15-5 Precipitation Hardened Corrosion Resisting Steel
  - Cond 1100 (ºC) Material Properties
    - Yield Strength of 115 KSI
    - Ultimate Strength of 140 KSI
    - Weld and Heat Treatment Process
      - Defined and verified for EM-1 Series; Shafts are beautiful !
      - SLAC Welders though not specifically certified know how to do it
      - Weld rod is expensive and in house (with certs)
      - SLAC Furnace is much lower cost that outside vendors
      - SLAC Furnace is large enough to do Rotation Stand Shaft-Flange Assys and Z Axis Horizontal Lift Spreader all at the same time
  - Only about 20% more expensive than steel if purchased from Fry Steel Co.
    - Material Composition Analysis and Proof Test Certifications are free if requested at time of purchase
    - Other vendors are much more expensive

LAT Transport Container

- Design Philosophy
  - Attempting to fit in 88” Truck
    - Taller and more narrow version adds $20-30K for engineering and mass plate
  - Have a concept that works but requires additional ~ $20K for non-std truck width for cross-country ride to NRL
    - Isolation system appears satisfactory
      - Would like to reduce 1st harmonic to < 1 Hz for Cross-Country ride
      - Currently 1st harmonic is ~ 3.1 Hz (TBC)
- Work in progress
  - Layout is in work; may not be available this week
  - Vibration Report in review
    - First Iteration, expect another iteration for final design to follow (1 wk)
- Issues
  - Limited Modal Survey should be done
    - Limited Accels, use Proof Test Weight 1 (same as max LAT) and Air Ride Truck
    - Not a current budget line
    - Estimated cost : ~ $20K (TBC)

LAT Transport Container

- Images 2 Configurations
- Configuration using GPR

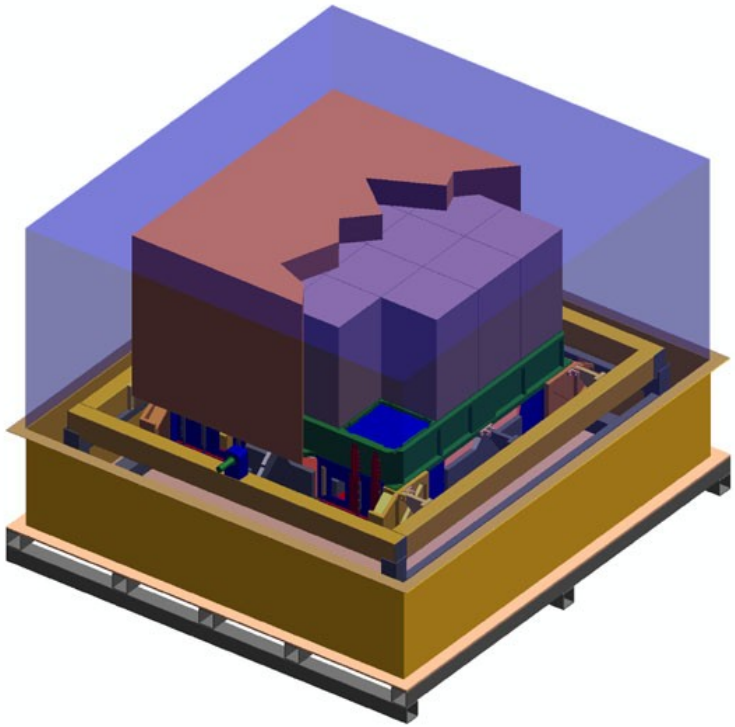

LAT Transport Container

- Configuration using Large Mass Plate
  - No longer Vibe Test Plate (since that is now 4 small plates)
  - Could consider a concrete loaded frame to reduce cost

Environmental Test

- EMI Test Stand
  - Orientation during Test : Z Axis Horizontal
    - Propose using 90º Braces attached to GPR
      - Detail Drawings 70% Complete
      - Materials not long lead
    - Requires 3' high support blocks
      - Design Not Started (Considered very simple; plenty of time)
      - Materials not long lead
  - Need feedback from NRL
    - Rough Layout sent last Nov.

Environmental Test

- Vibration Test Fixture
  - Have SC to LAT Bracket Modeled; Looks Preliminary
    - I'll refer to them as the "Spider Leg Flexures"
  - Stress indicates four small interface brackets to NRL shaker will work
    - No need for $20K large interface plate
    - Interface Brackets are for Bounding Purposes Only !
      - Need Vibe Shaker interface bolt size and pattern from NRL

Environmental Test

- Acoustic Test Stand – Not in MGSE Budget (at all; Zero !)

- T-Vac Test Stand Concept
  - Propose using GPR with 90º Brace Set
    - Need to verify Corner Mount to SC Mount hand-off Process
    - Believe idea is sound, but need to verify using GPR, Both GPR to Grid Bracket sets and proof test weight
  - To do so requires GPR to Grow along X by 6”
    - Need concurrence from NRL that this could work
- NRL needs to define Cold / Hot Plate Heat Exchanger Sizing and plumbing
    - Need sizes to determine if T-Vac Heat Ex’rs can be safely slid into place (Eric believes they can if GPR grows by 6” along X)

T-Vac Concept

Radiator Support Braces Are TBD; These Are Shown Only As Indicator That We Need Something Here; Need Feedback From NRL for Cold Plates

Radiator Corner Mount to GPR Brackets, Though Shown, Will Be Removed Prior to Test (So, Ignore Them for Now)

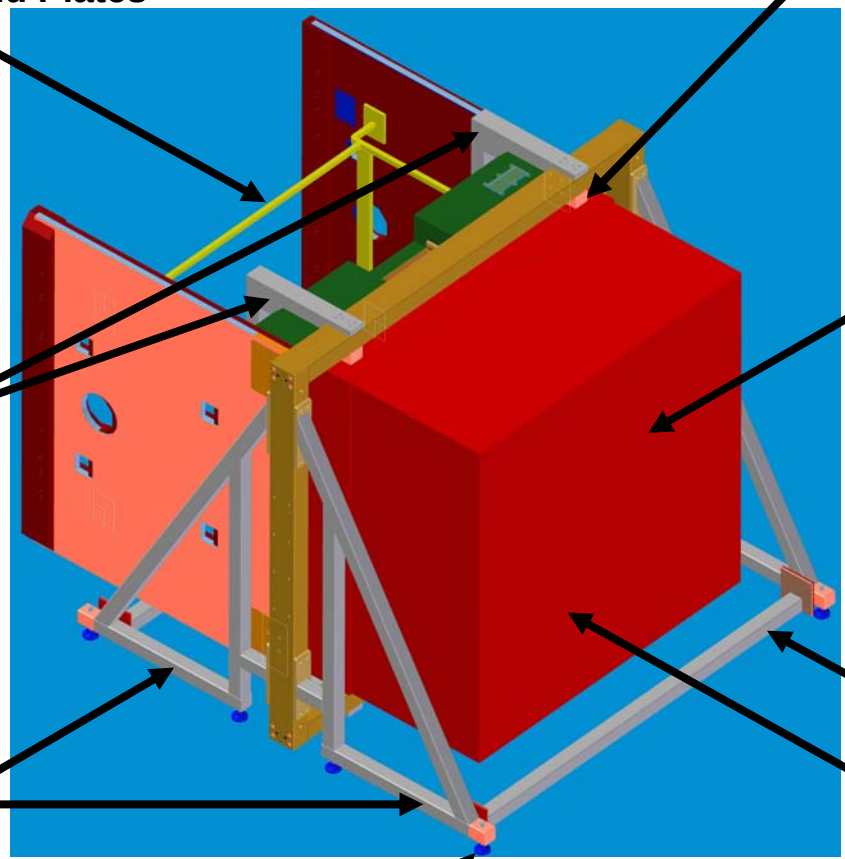

T-Vac Grid Support Braces Are In Work; Idea is That They Attach to the Spectrum Provided Spider Leg Flexures That Attach to the Grid

ACD Stay Clear; Not Quite Centered Correctly Yet

90º Brace Set is Made of Aluminum

Horizontal Tie Beam is Further outbound Along +Z than ACD Top Surface

Blue Pads Are Adjustable Feet for Leveling Purposes

T-Vac Stand Concept

Distance Along Y Axis Should Have ~ 7.67" Clearance Between ACD BEA and Inside Surface of GPR

Note: One side is currently 8.158", the other is 7.189" Please Ignore This for Now We'll Center it Soon

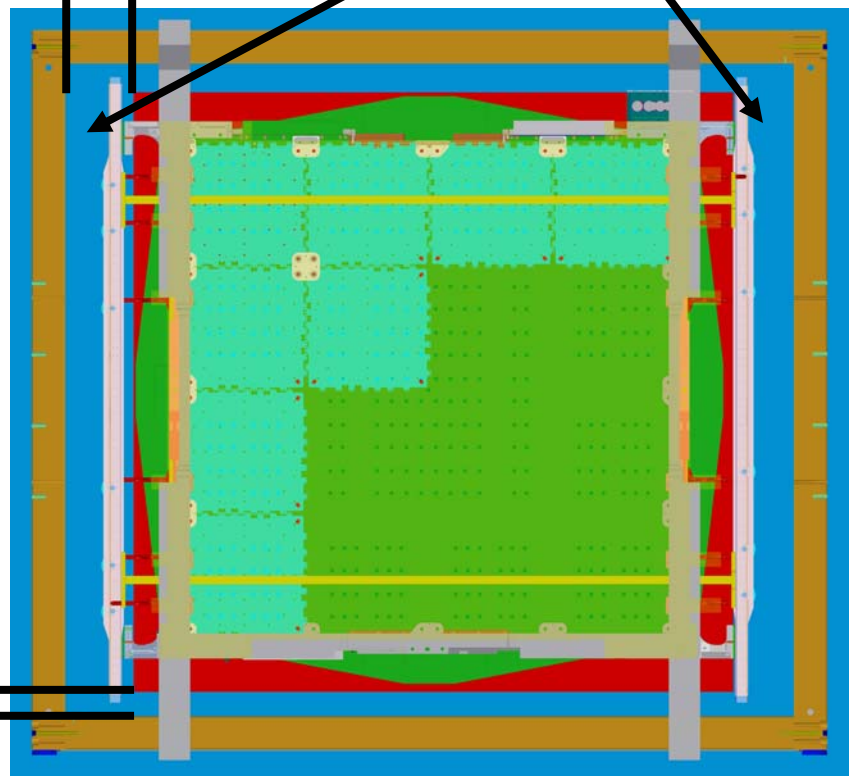

Is Clearance Along Y Acceptable ?

3.434" Between ACD BEA's X Axis Surface and the Inside Surface of the GPR (Eric feels we need to increase to 6" + for Hx'ers)

Stress Analysis for Increase of 3" on a Side (along X) is In Work; Affects Grid to GPR Bracket, GPR Deflection and the SC Spider Flexure Interface Braces

T-Vac Stand Concept

Radiators Not Shown in This View

Your Model Should Show What I'll Refer to as The SC to Grid Spider Leg Flexures

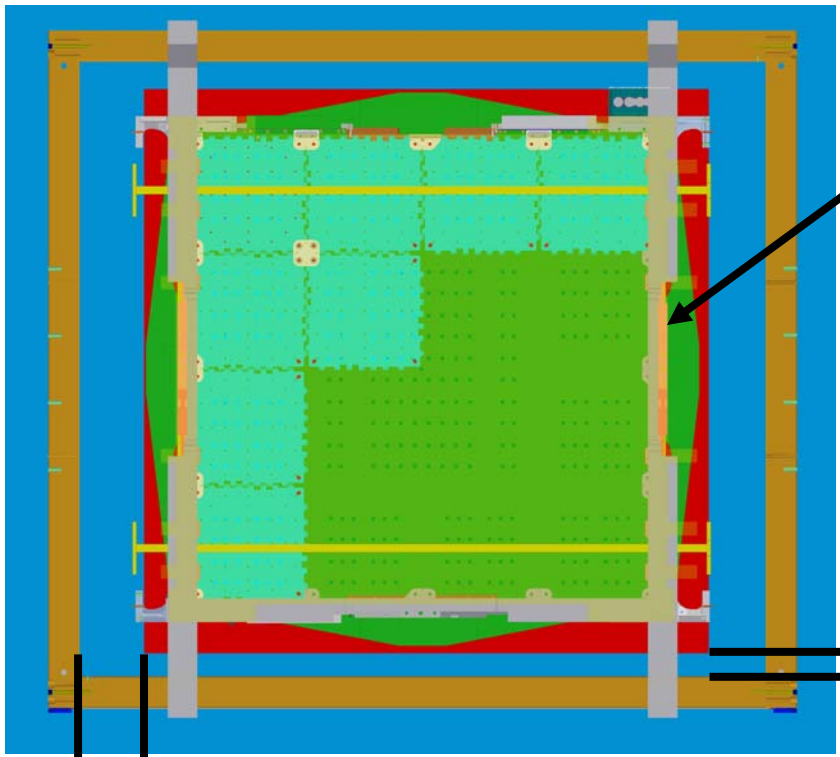

Again, This is ~ 3.434"; After Your Evaluation of This Stand for T-Vac Use, Would It Work If it Were 6" + ?

Stress Analysis is in work; Need to Hear from You. Should I Stop Analysis ?

Distance Along Y Axis Should Have ~ 7.67" Clearance Between ACD BEA and Inside Surface of GPR

Note: One side is currently 8.158", the other is 7.189" Please Ignore This for Now We'll Center it Soon

T-Vac Stand Concept

While Ok for This, Not Ok for ACD Clearance

2.763” Between Radiator’s X Axis Surface and the Inside Surface of the GPR (Eric feels this is ok for Hx’ers)

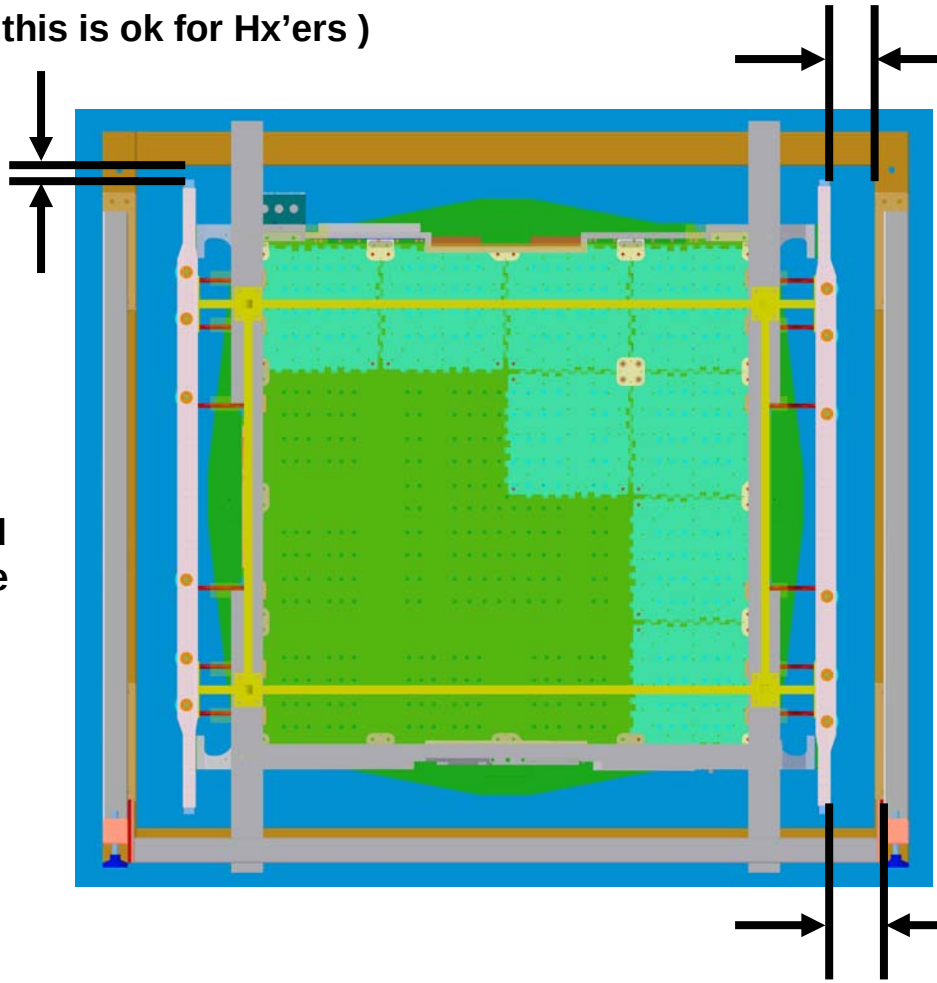

5.306” Clearance Between Radiator and Inside Surface of GPR

Viewed From – Z Toward + Z; This Represents the Field of View for the SC Simulator Heat Plate

6.306” Clearance Between Radiator and Inside Surface of 90º Brace

Summary

- **Need Authorization to Proceed for:**
  - Purchase of long lead items
    - GPR frame pieces
    - GPR to Grid attach bracketry
    - Support Shaft Materials and Machining
    - Bearings
    - Rotation Drive, Flex Coupling & Drive Motor
  - Rotation System Weldment
  - LAT Lift Spreaders
    - Z Axis Vertical (analysis in work)
    - Z Axis Horizontal (analysis in work)
  - Proof Test Hardware
    - Design to begin after GPR ATP

APPENDIX A

Mechanical Operations

Before Integration Start

LAT MGSE Review – Mechanical Operations

- Receive Grid and Grid Incidentals from Manufacturer
  - Acceptance Data Package Review
    - As Built Inspection Report (Includes thread features ?)
    - Material Processing Traveler (Chem Comp, Heat Treats, Surface Treats)
    - Mass Properties and Visual Inspections
    - Non-Conformance Reports
  - Grid Incidentals include
    - EMI Skirt Sections
    - Radiator Corner Mount Brackets
    - Down Spout Heat Pipe Patch Panels
    - Down Spout Heat Pipe Set
    - +Z Heat Pipes
    - Fastener Hardware (Flight Certs and thread protection ?)
  - Assume Grid and Grid Incidentals are packaged separately

LAT MGSE Review – Mechanical Operations, Cont

- Forklift Grid within its shipment crate from truck and place in B-33 Receiving Area (after cleaning)
- Remove Grid Incidentals from trucks and hand cart into B-33 Gowning Room
  - Un-package, clean and route into B-33, Rm 103
- Open Grid shipment crate, open plastic wrap outer layer
  - Attach four endless round fiber rope loops to Grid, one at each side's mid-point, using Double Wrap Basket Hitch (?)
  - Crane Op from crate onto three I&T Dollies (hitches remain attached to Grid)
  - Carefully roll Grid over to B-33, Rm 104 Double Doors
    - Sticky mat (5 ft roll length ?) required at Door Entry, outside of clean room; Safe any EM hardware in Rm 104
  - Open Double Doors and roll Grid into Clean Room 104; Close doors as soon as practical, clean up area, remove plastic wrap; Gloves Required, ESD Not Required

LAT MGSE Review – Mechanical Operations, Cont

- Crane Op Grid from dollies to large Granite Surface Table in Rm 104 (is table large enough ?)
  - Place Grid on 2” Inspection Blocks, remove lift hitches and remaining plastic wrap
  - Visually Inspect and clean as / if required
- Attach Radiator Corner Mount Brackets (RCMBs) and torque to flight requirement (in TBD pattern ?)
- Crane Op LAT Lift Fixture, Grid Perimeter Ring (GPR) with GPR to Grid attach brackets over Grid and lower into position with RCMB clevices
  - Install Clevice Pins and cotter keys
  - GPR should be at rest on some type of “simple” adjustable support (Lift Fixture can remain attached carrying slight load if not in the way)
  - LAT Lift Fixture has passed Prelim Proof Test of 2X GPR / Bracket weight
  - In situ reaming allowed if less than 0.005” of material is to be removed; otherwise, NCR Process

LAT MGSE Review – Mechanical Operations, Cont

- Attach LAT Support Shaft Flange Assemblies to GPR and torque certified fasteners to drawing requirement
  - Alignment / Shaft Flange Shear Pins have previously been match located (more on this in Hdwr Review Section)
- Crane Op GPR, Grid and support shaft assemblies onto LAT 4 x 4 Rotation / Support Stand (using LAT Lift Fixture)
  - Apply liberal amount of Braycoat grease to bearing surfaces
- Align rotation drive and support pillow block bearings (Bearings have remove able "Top Caps" if supported by analysis)
- Rotate drive motor by hand to align flex coupling gear teeth
  - Slide and lock flex coupling outer gear sleeve into position
- Perform final alignments and install bearing "Top Caps"
- Torque certified fasteners and shaft thrust management collars

LAT MGSE Review – Mechanical Operations, Cont

- Remove LAT Lift Fixture from GPR
- Move Personnel Access Platforms are in position
  - Define measurement process for ensure clearance between MGSE and Flight Hardware
- Check Rotation / Support Stand function; Leave Grid in + Z Up Position
- Attach LAT Lift Fixture to GPR; Remove Bearing Top Caps and Flex coupling sleeve, then Crane Op Grid back to Surface Table (on 2" risers)
- Remove Clevice Pins, then crane op Lift Fixture – GPR – Bracket Assembly to 3 dollies; Drape Grid and Open Double Doors to relocate Lift Fixture – GPR – Bracket Assembly back out to B-33 Receiving Area
- Mechanical Systems performs Grid Preps in Rm 104
  - Install / Bond +Z Heat Pipes to Grid
    - Consider Vacuum Bagging with special HP Spreader Plate ?

LAT MGSE Review – Mechanical Operations, Cont

- In parallel, I&T performs full-up Proof Test of Lift Fixture – GPR – Bracket Assembly using 15 Ton Crane in B-33 Receiving Area
  - Proof Test Weight ~ 17,172 lbs (8.6 Tons)
    - LAT Max = 3200 Kg = 7,056 lbs
    - GPR ~800 lbs, GPR to Grid Brackets ~200 lbs total, Lift Tension Rods and Turnbuckles ~200 lbs total, Support Shaft Flange Assemblies ~300 lbs, Fasteners ~ 30 lbs; Total +Z Lift MGSE = 1,530 lbs
    - (7,056 + 1,530) (2) = 8,586 lbs (2) = 17,172 lbs
    - Actual weight to be tuned as "As Built" weights of MGSE become available
  - After Lift Fixture is proofed, the GPR with Proof Test Weight will be attached to the 4 x 4 LAT Rotation / Support Stand to Proof Test it
    - Requires Proof Test of Rotation Function too to validate clevice pin – hole capability
      - Planning to do this with 1st Proof Test Weight (i.e., LAT mass only)
    - Plan to validate torque capability by analysis only (TBC ?)

LAT MGSE Review – Mechanical Operations, Cont

- After 4 x 4 Rotation / Support Stand, Support Shaft Flange Assemblies, GPR, GPR- Grid Brackets and Clevice pins have been Proof Tested, I&T would Proof Test the Z Axis Horizontal Configuration
  - LAT Level Proof Test weight is actually a two piece assembly
    - First piece has interfaces for GPR-Grid Bracket clevice
      - Also includes SC Bracket to LAT interfaces
    - Second piece attaches to first piece and is remove able
  - Remove "second" weight piece with +Z Up using 15 Ton crane
  - Demonstrate installation of GPR to LAT SC Bracket interface Structures (some detail in Hdwr Review Section)
    - Demonstrate load Hand-Off from LAT Corner Brackets to GPR to LAT SC Bracket interface Structures
  - Re-Install LAT Level second proof test weight piece to first weight piece and rotate to Z axis Horizontal
  - Install 90º Brace Set (more in Hdwr Review Section) and remove GPR Proof Test System from 4 x 4 Rotation / Support Stand using Z Axis Horizontal Lift Fixture (detailed in Hdwr Review Section)

LAT MGSE Review – Mechanical Operations, Cont

- Set GPR Z Axis Horizontal Proof Test System on Receiving Area floor and remove Z Axis Horizontal Lift Fixture
  - Note: The 90º GPR Brace Set interface to the GPR will have been previously static load tested based upon SLAC Seismic Analysis results for the Z Axis Horizontal orientation (detailed in Hdwr Review Section)
- Level a TBD GPR surface to ± 0.1º of horizontal
- Re-attach Z Axis Horizontal Lift Fixture to GPR and Crane Op back onto 4 x 4 Rotation / Support Stand
  - Not planning to Proof Test opposite 90º orientation; Plan to explain as Tested by similarity (TBR ? Only interfaces not challenged are two ¾" through holes in 4" by 6" GPR cross section; detailed in Hdwr Review Section)
- Remove 90º Brace Set from GPR and rotate to +Z Up
- Remove second LAT Level proof test weight
- Re-attach Grid to GPR corner brackets and demonstrate load hand back from LAT SC Bracket interface Structures (some detail in Hdwr Review Section) to corner brackets
  - Note: This "Demonstration" may only be partial due to the stiffness difference between the steel weight plates and the Aluminum Grid section; Further Analysis Required (detailed in Hdwr Review Section)

LAT MGSE Review – Mechanical Operations, Cont

- Remove first LAT Level proof test weight from GPR Corner brackets
- Safe Grid in Rm 104 and prepare for opening Double Doors to Rm 104 (bag the Grid, clean the area outside of Clean Room place sticky mats, perform particle count verification of readiness to open doors, etc)
- Stage 4 x 4 Rotation / Support Stand for entry into Rm 104 (i.e., Roll / electric tug back it in front of double doors with enough room to open doors to Clean Room)
- With QA Authorization, open doors and move 4 x 4 Rotation / Support Stand back into Clean Room
- Close Double Doors and clean surfaces as required
- Remove bag from Grid
- When Mech Systems is ready, use LAT Z Axis Vertical Lift Fixture to Crane Op GPR from Rotation Stand
  - Remove Proof Test Weights
  - Attach to Grid and pin Clevices

LAT MGSE Review – Mechanical Operations, Cont

- Attach GPR Corner bracket clevice pins to Grid interface
  - Note any / all deviations from previous assembly experience; Use NCR Process if required
- Crane Op GPR-Grid Assembly back onto Rotation Stand using the LAT Z Axis Vertical Lift Fixture
- Re-align rotation shafts to drive system, install bearing Top Caps and drive flex coupling; Torque all fasteners to drawing requirements
- Remove LAT Z Axis Vertical Lift Fixture from GPR at the GPR interface, then remove two Tension Rod – Turn Buckle Assemblies and use crane to move remaining Tension Rod assemblies away from the Grid
  - This may require guide roping during Crane Ops
- Move LAT Lift Fixture to a safe area and remove remaining Tension Rod Assemblies
- Lower LAT Lift Fixture onto 3 roll dollies, disconnect from Crane and safe the crane

LAT MGSE Review – Mechanical Operations, Cont

- Place Safety Ropes around Lift Fixture as it will be a trip hazard
- Allow Mech Systems to continue Grid Preps
  - Install DSHP Patch Panels to Grid (Bond too, to ensure process is understood ?)
  - Install EMI Skirt Sections
  - Perform inspections
    - Use Boro-scope to inspect all CAL to Grid and TKR thermal tie receptacles ? Or, do this while GSE brackets are being machined ?
    - Check Grid sag for each orientation (Do we need to do this ? If yes, how would we do it ? Would we want to install 16 Tower Mass Simulators to CAL to Grid Shear Plates and measure ? Measurement System resolution 10 times better than expected value of 0.005”; i.e., measurement resolution of > 0.0005” TBR)

LAT MGSE Review – Mechanical Operations, Cont

- When Mech Systems is done with Grid Prep Ops, how is Heat Pipe performance validated ? Is I&T involved ?
  - Crane Op GPR-Grid-DSHP Assembly into TBD Transport Container for relocation to T-Vac Test Area at LM or Loral ?
    - Has analysis been performed to validate an ambient pressure test ? Test with convection may not be acceptable to ensure readiness to proceed ?
    - Can Fein Focus System be used to perform void check ?
    - Note: The LAT Transport Container will not be available for this transport event
- Resolve any issues Mech Systems may raise with respect to the Personnel Access Platform / Rotation Stand, etc, that were noticed during their Ops
  - This can be done in parallel with Grid Heat Pipe validation ?

LAT MGSE Review – Mechanical Operations, Cont

- Assume Grid is Ready and Formal Responsibility Turn Over from Mech Systems to I&T occurs without much difficulty.
- Begin Flight Hardware Integration In Accordance With (IAW) LAT Integration Sequence document (LAT-MD-00676-Rev, Then Current) and Detailed Procedures that will be matured through the Training Activities
  - Training MGSE for 1 x 4 is 99% in house and ready to use
  - Training Hardware not part of MGSE responsibility
  - Training using the 4 x 4 Rotation / Support Stand and the Personnel Access Platform must wait for MGSE arrival
    - Performed during Grid Sub-System Heat Pipe Bond Void Verification / T-Vac test ?

APPENDIX B

Existing LAT MGSE

APPENDIX B

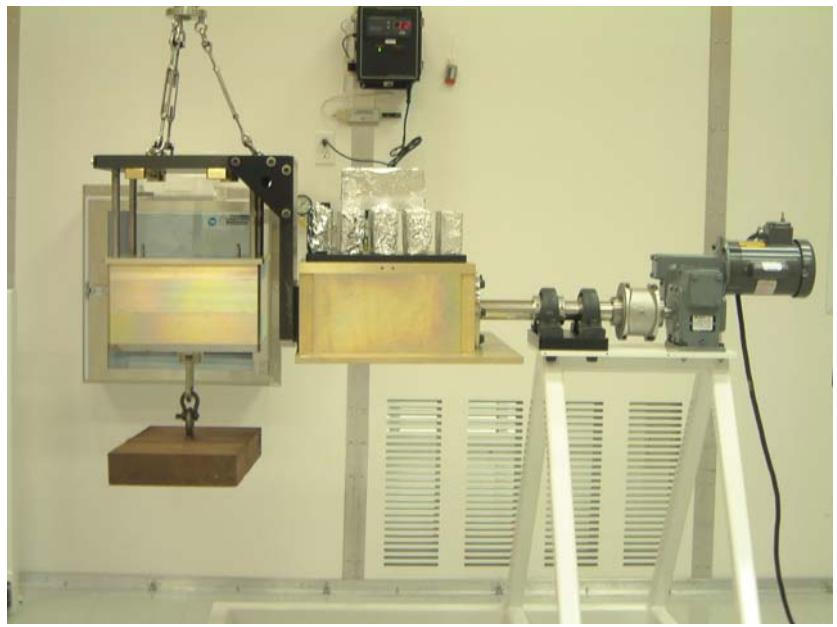

APPENDIX B

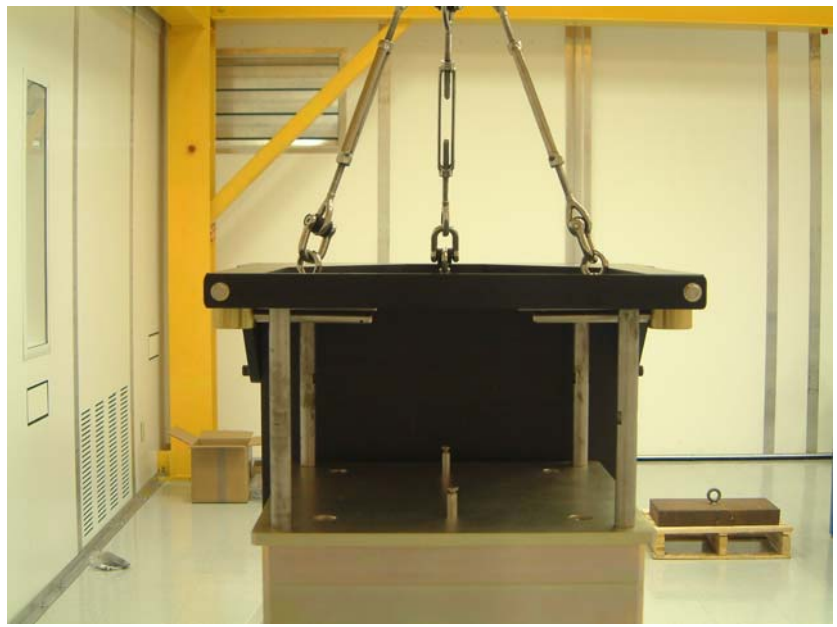

APPENDIX B

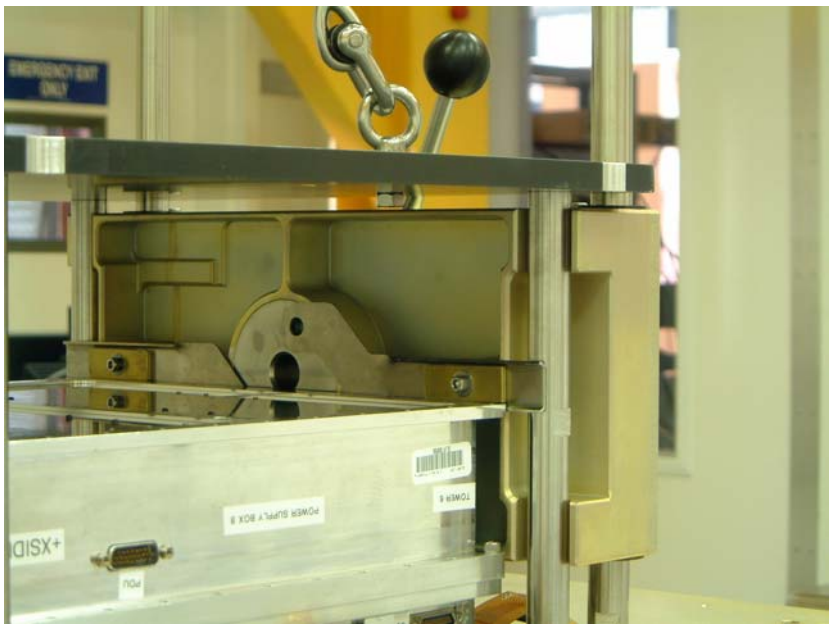

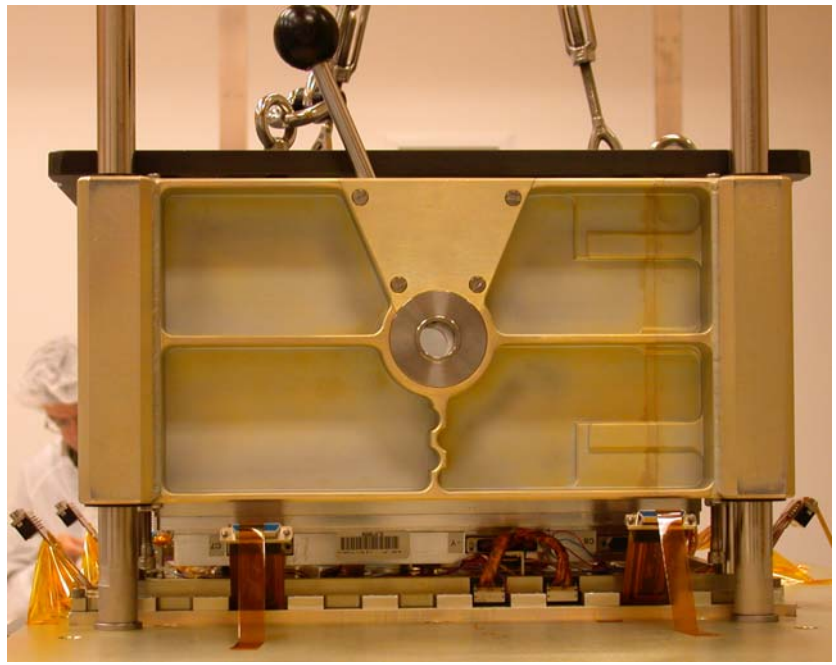

APPENDIX B

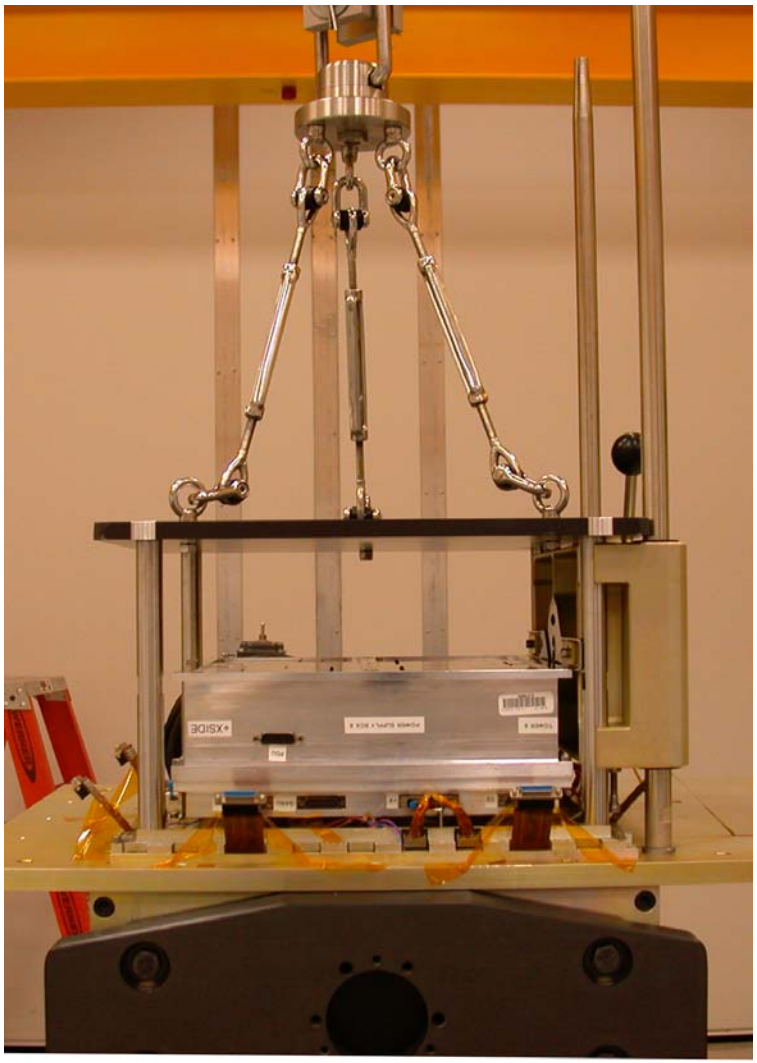

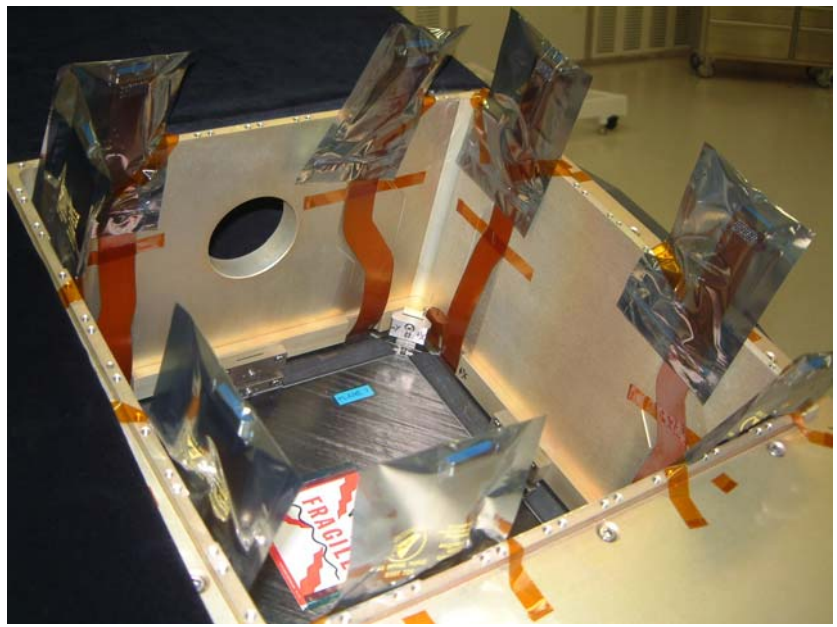

APPENDIX B

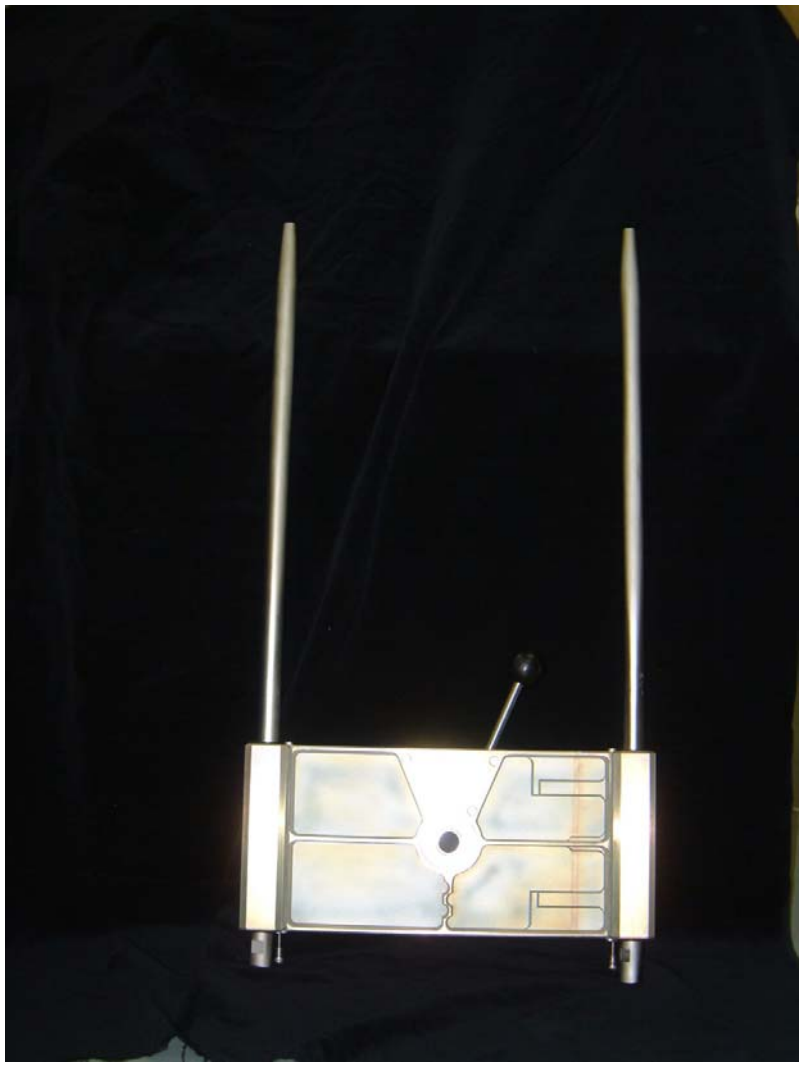

APPENDIX B

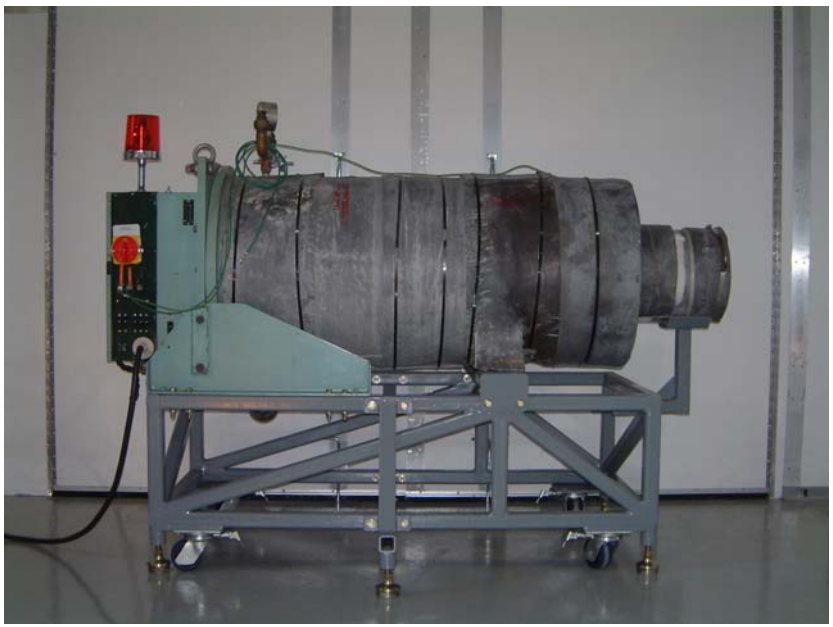

APPENDIX B

APPENDIX B

APPENDIX B

APPENDIX C

Previous Concepts

APPENDIX C

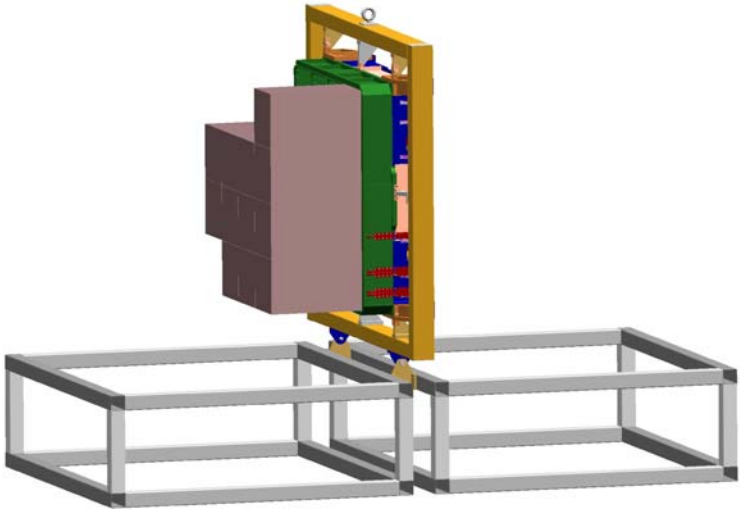

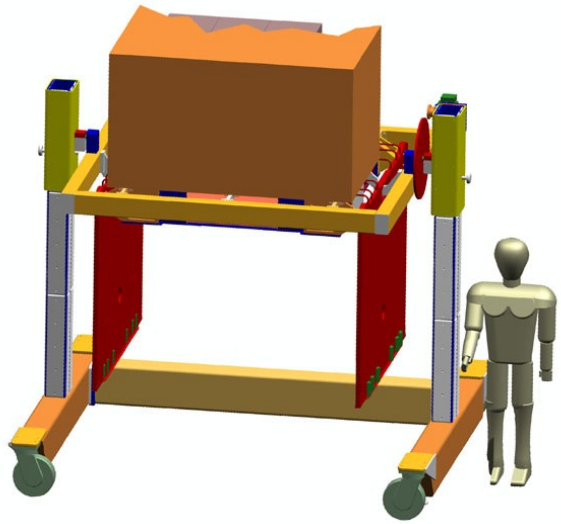

APPENDIX C

Wheel Integration Stand Concept

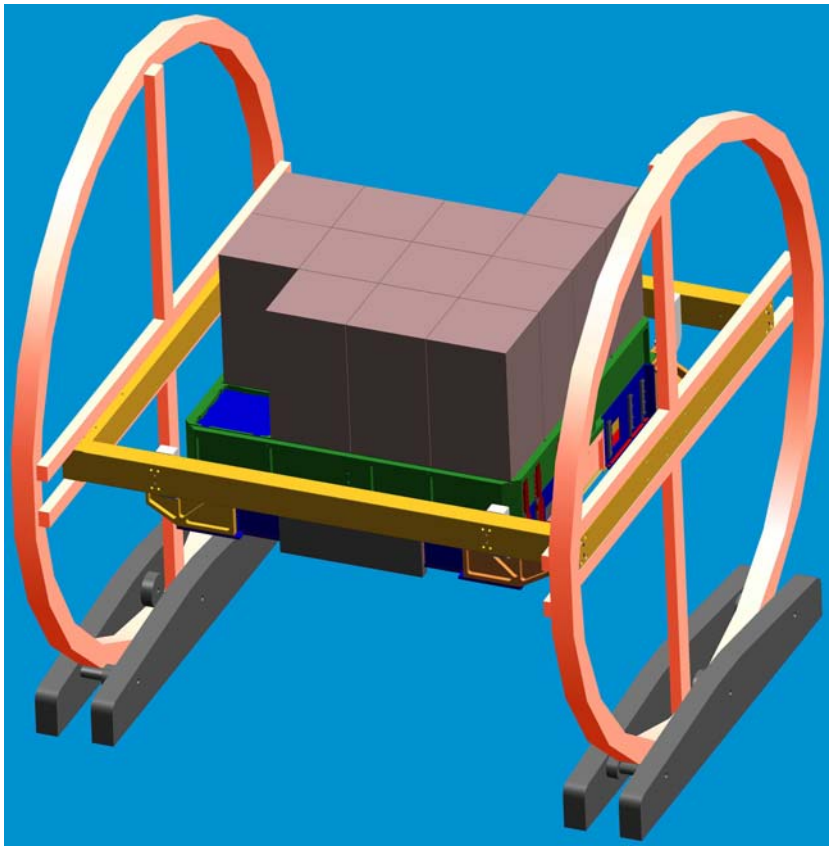

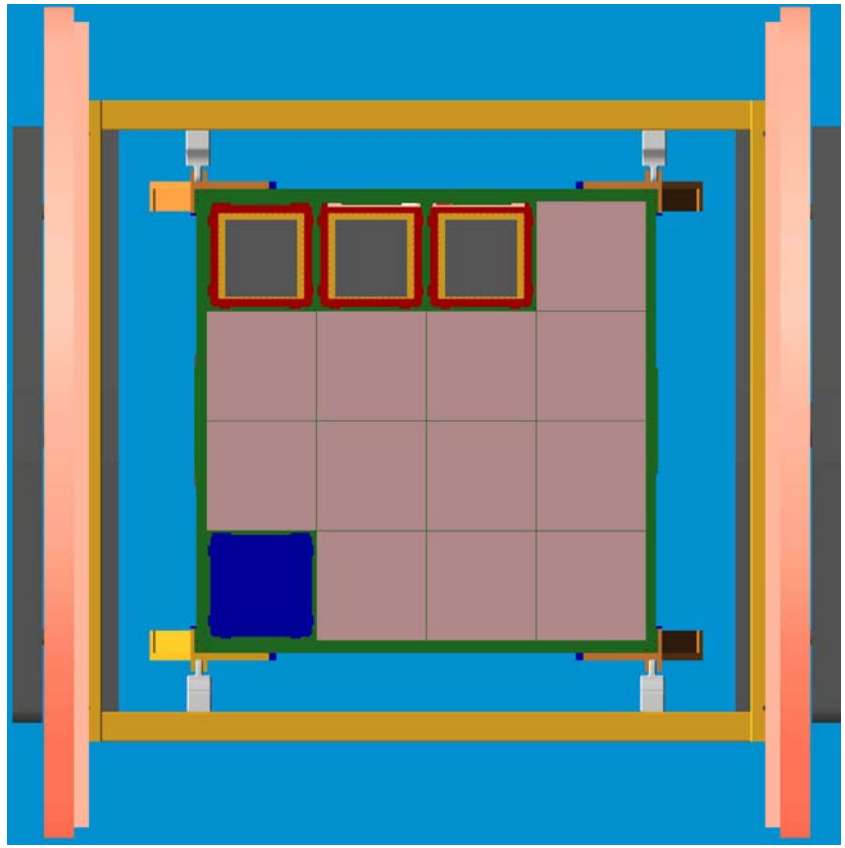

APPENDIX C

Previous Concepts

APPENDIX B

Previous Concepts

APPENDIX B

Previous Concepts

APPENDIX B

Previous Concepts

APPENDIX B

Previous Concepts