REV	DESCRIPTION	DWN	CHKR	APVD	DATE
2	CHANGE IN BOM, ADDED WIRE BOND LAYOUT	BJ	DJN	TB	10/24
3	CHANGE IN BOM	BJ	DJN	TB	12/10
4	CHANGE NOTES, & BOM	BJ	DJN	TB	5/5/03
5	ADDED PART NO. TO ITEM 19 AND 25	BJ	DJN	TB	6/10/03
6	ADDED PART NO. TO ITEM 10, REMOVE NOTE 5, ADDED GTFE, GTRC DETAIL, DOUBLE BIAS WIRE BOND, CONN. SAVER, REMOVE#23,24	BJ	DJN	TB	10/16/03
7	CHANGED NOTES, DELETE DET. B, ADDED ITEM 23, ADDED NUMBER TO GTFE, GTRC.	BJ	DJN	DR	02/02/04

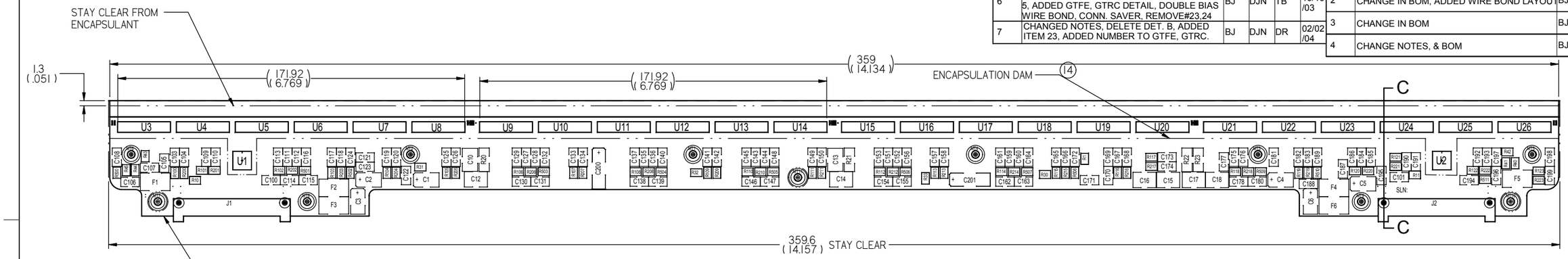

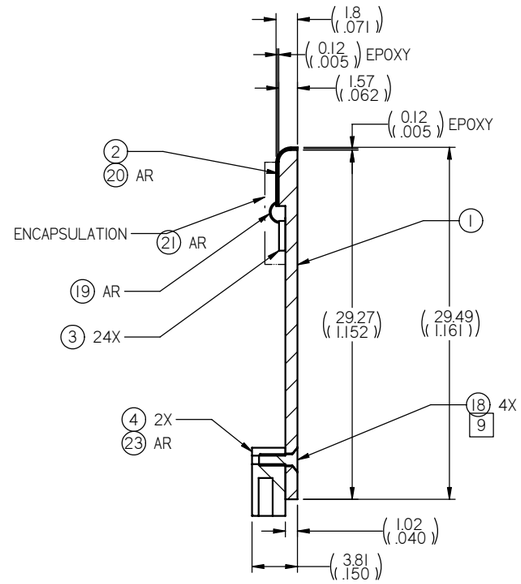

SECTION C-C
SCALE 4:1

DESIGNATION	ITEM	STOCK OR PART NO	TITLE OR DESCRIPTION	QTY
	30	BN7.16C40SHC/912	M1.6 X 0.45 X 4 MM SHCS ALLOY STL 12.9	6
	29	LAT-DS-00544	TMCM STORAGE COVER	1
	28	LAT-DS-00543	TMCM STORAGE BASE	1
	27	TELEDYNE #7261633 & TELEDYNE #7261638	HUMISEAL 1A2O, CONFORMAL COATING	AR
	26	OMNETICS A8597-001	CONNECTOR SAVER, 37 PIN	2
	25	TELEDYNE #7506598 OR # 7506598-1	SN62, SOLDER PASTE	AR
	24	DELETE		
	23	TELEDYNE #7506502	SOLDER WIRE	AR
	22	TELEDYNE #7261105-1	EPO-TEK H20E, DIE ATTACH, EPOXY	AR
	21	TELEDYNE #7261693-1	HYSOL FP4450, DIE ENCAPSULANT	AR
	20	TELEDYNE #7261679-1	SCOTCHWELD 1838 B/A, EPOXY, GREEN	AR
	19	TELEDYNE #7118118-23	BOND WIRE AL 99%, Si 1%, .001" DIA	AR
	18	NAS723CE100-120	M1X0.25 X 0.120" LG FLAT HD CS, SST	4
C200-201	17	CWR09CC685KBB/TR	CAP, 6.8UF, 4V, VISHAY SPRAGUE	2
R100-123, R500-511	16	M55342M02B680KR	RES, 680K 5%, SOTA	36
R20-23	15	D55342M07B270KR	RES, 270K 5%, SOTA	4
	14	TELEDYNE #7261685-1	HYSOL FP4451, DIE ENCAPSULANT DAM	AR
R40-45	13	M55342M02B100DR	RES, 100 1%, SOTA	6
R1, R200-223	12	M55342M02B39K0R	RES, 39K 5%, SOTA	25
R10-11	11	M55342M02B12K0R	RES, 12K 5%, SOTA	2
R30-33	10	H0505CPX000	RES, 0 OHMS, 5%, SOTA	4
F1-6	9	SMDC014-2	POLYSWITCH 0.3 AMP, TYCO/RAYCHEM	6
C10, C12-18	8	1210B563K251YHTM	CAP 56NF, 250V, NOVACAP	8
C1-6	7	CWR09CC475KBB/TR	CAP 4.7uF, 4V VISHAY SPRAGUE	6
C100-101, C103-178, C180-199	6	CDR01BX332 BKSR TM	CAP, 3.3NF, 100V, AVNET	98
U1-2	5	LAT-DS-00893	GTRC MECH LAYOUT , V-7	2
J1-2	4	OMNETICS A8485-001	CONN, RECPT, 37 PIN	2
U3-26	3	LAT-DS-00389	GTFE MECH LAYOUT	24
	2	LAT-DS-00370	TMCM PITCH ADAPTER FLEX	1
	1	LAT-DS-00368	TALL TMCM PWB	1

NOTES:

1. DIMENSIONS IN BRACKET ARE FOR REFERENCE ONLY. THE LOWER DIMENSION, IN DOUBLE BRACKET, IS INCHES.
2. PARTS TO BE THOROUGHLY CLEANED TO REMOVE ALL OIL, GREASE, DIRT AND CHIPS.
3. FOR TMCM SCHEMATIC SEE DRAWING #LAT-DS 00130.
4. FOR TMCM GEREBER FILE SEE DRAWING # LAT-DS- 01984
5. ASSEMBLY PER TELEDYNE DRAWING #7108742 (LAT-DS-01856)
6. DELETE
7. TEST PER LAT-PS-01971.
8. CONFORMAL COATING THICKNESS SHALL BE 0.03 - 0.13 MM (0.00118 - 0.00512 INCH). THE CONFORMAL COATING SHALL NOT BE APPLIED TO ENCAPSULANT AREA (ITEM #14 AND #21). THE CONFORMAL COATING SHALL BE FREE OF BUBBLES, BLISTERS, VOIDS OR BREAKS -. THERE SHALL BE NO VISIBLE CRACKS, LIFTING, CRAZING, MEASELING, AND/ OR WRINKLES IN THE CONFORMAL COATING MATERIAL. THE CONFORMAL COATING SHALL BE FREE OF CONTAMINATION. DISCOLORATION OF COATING IS NOT ALLOWED. MINOR SURFACE SWIRLS, STRIATIONS, OR FLOW MARKS ARE NOT CONSIDERED DEFECTS. INSPECTION OF CONFORMAL COATING MAY BE PERFORMED UNDER AN ULTRAVIOLET LIGHT SOURCE. MAGNIFICATION FROM 4 TO 10X SHALL BE USED.
9. TORQUE SCREWS (ITEM #18 AND #26) TO 8-10 INCH-OZ. OF TORQUE.
10. MATING CONNECTOR SURFACES (ITEM #4) SHALL BE FREE OF CONFORMAL COATING. CONFORMAL COATING SHALL NOT NEGATE LEAD STRESS RELIEF OF CONNECTOR.
11. PITCH ADAPTER TRACES SHALL BE FREE OF CONFORMAL COATING.
12. INSTALL TMCM IN ITEMS #28 AND #29 PER SHEET 3.

LAT-DS-00764
NEXT ASSEMBLIES:

DIMENSIONING AND TOLERANCING IS IN ACCORDANCE WITH ASME Y14.5M-1994.
UNLESS OTHERWISE SPECIFIED
DIMENSIONS ARE IN MM.
TOLERANCES:
BREAK EDGES 0.1-0.3
INTERNAL CORNERS R 0.3 MAX
FRACTIONS ± ---
DEC .X ± 0.10
.XX ± .05
.XXX ± ---
ANGLE ± 1/2°
1.6(63) ALL SURF

SCALE: 2:1
DO NOT SCALE DRAWING
CAD FILE NAME: LAT-DS-00899-07.dft

STANFORD LINEAR ACCELERATOR CENTER
U.S. DEPARTMENT OF ENERGY
STANFORD UNIVERSITY STANFORD, CALIFORNIA

		DATE
ENGR	T. BORDEN	
DWN	B.BHATNAGAR	
CHKR	T. BORDEN	

APPROVALS
T. BORDEN
R. JOHNSON
A. BREZ
D.NELSON

LAT TRACKER TOWER ASSEMBLY HVY CONVERTER TRAY ASSY TALL TMCM ASSEMBLY

DRAWING NUMBER LAT-DS-00899
REVISION NUMBER 7
D
SH 1 OF 3

LAT TKR TRAY ASSY TMCM TALL

SLAC FORMAT V2.0

REV	DESCRIPTION	DWN	CHKR	APVD	DATE
D	LAT-DS-00899 7				

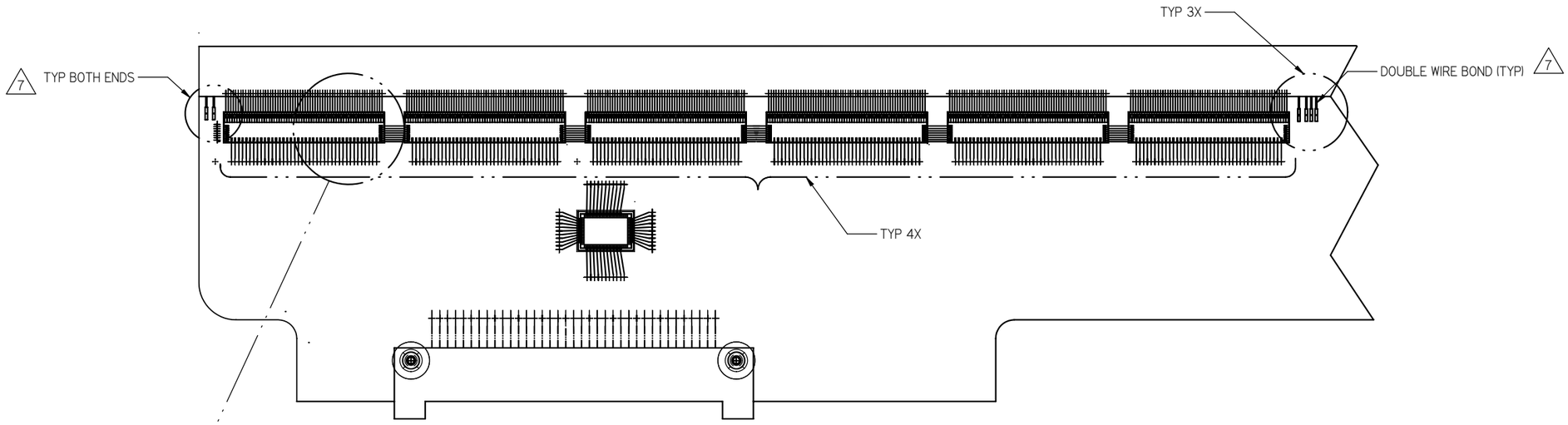

WIRE BONDING LAYOUT (TYP TO ALL GTFE AND GTRC)

SCALE 5:1

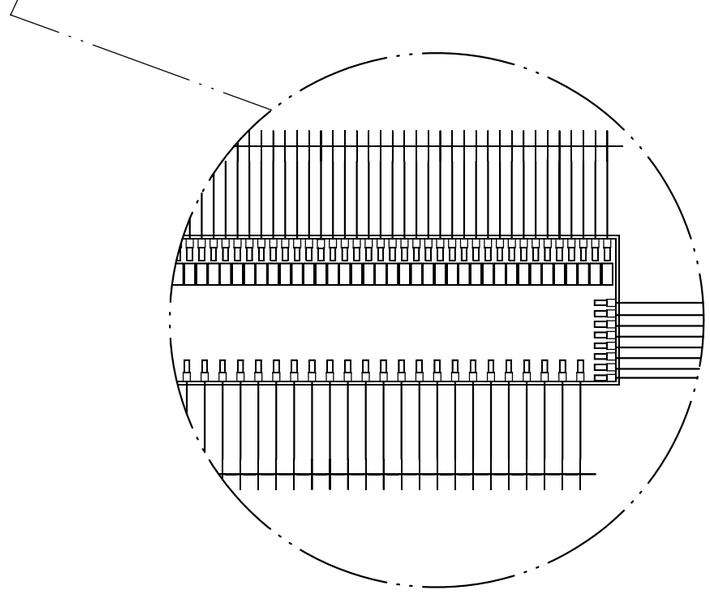

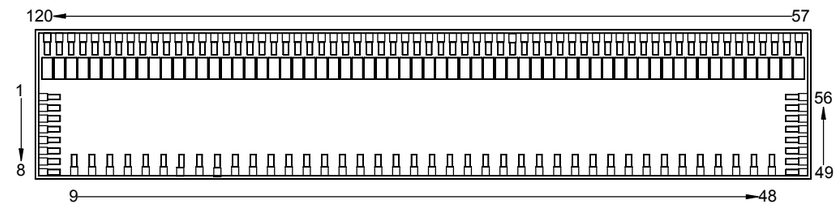

DETAIL GTFE 7

(PAD LOCATIONS IDENTIFIED FOR REFERENCE PURPOSES)

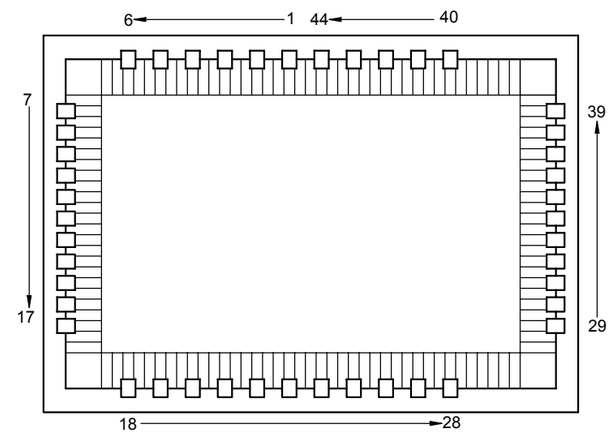

DETAIL GTRC 7

(PAD LOCATIONS IDENTIFIED FOR REFERENCE PURPOSES)

LAT-DS-00764

NEXT ASSEMBLIES:

DIMENSIONING AND TOLERANCING IS IN ACCORDANCE WITH ASME Y14.5M-1994.

UNLESS OTHERWISE SPECIFIED
DIMENSIONS ARE IN MM.
TOLERANCES:
BREAK EDGES 0.1-0.3
INTERNAL CORNERS R 0.3 MAX
FRACTIONS ± ---
DEC .X ± 0.10
.XX ± .05
.XXX ± ---
ANGLE ± 1/2°
1.6(63) ALL SURF

SCALE: 10:1

DO NOT SCALE DRAWING

CAD FILE NAME: LAT-DS-00899-07.dft

STANFORD LINEAR ACCELERATOR CENTER
U.S. DEPARTMENT OF ENERGY
STANFORD UNIVERSITY STANFORD, CALIFORNIA

	DATE	APPROVALS
ENGR T. BORDEN		T. BORDEN
DWN B.BHATNAGAR		R. JOHNSON
CHKR T. BORDEN		A. BREZ
		D.NELSON

LAT TRACKER
TOWER ASSEMBLY
HVY CONVERTER TRAY ASSY
TALL TMCM ASSEMBLY

DRAWING NUMBER LAT-DS-00899

REVISION NUMBER 7 D

SH 2 OF 3

LAT TKR TRAY TMCM TALL ASSY

SLAC FORMAT V2.0

REV	DESCRIPTION	DWN	CHKR	APVD	DATE
D	LAT-DS-00899 7				

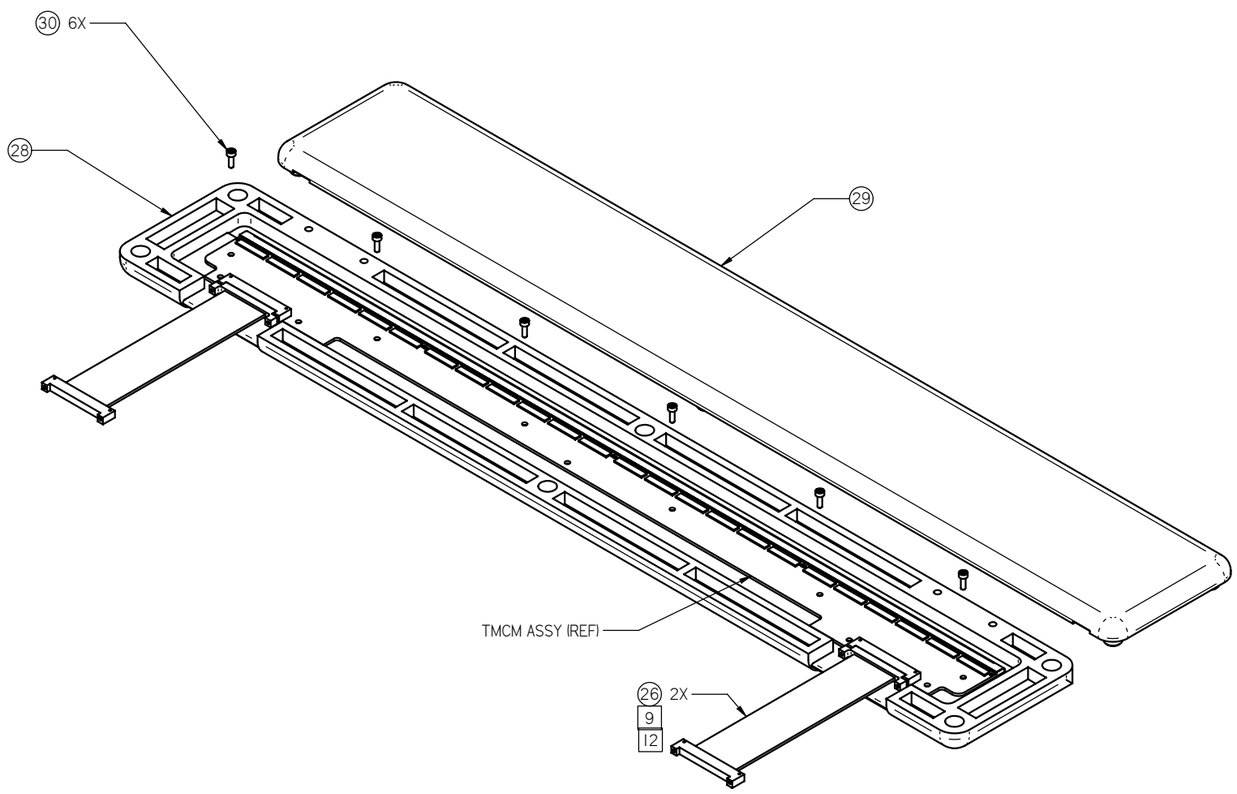

TMCM STORAGE

LAT-DS-00764

NEXT ASSEMBLIES:

DIMENSIONING AND TOLERANCING IS IN ACCORDANCE WITH ASME Y14.5M-1994.

UNLESS OTHERWISE SPECIFIED
DIMENSIONS ARE IN MM.
TOLERANCES:
BREAK EDGES 0.1-0.3
INTERNAL CORNERS R 0.3 MAX
FRACTIONS ± ---
DEC .X ± 0.10
.XX ± .05
.XXX ± ---
ANGLE ± 1/2°
1.6(63) ALL SURF

SCALE: 2:1

DO NOT SCALE DRAWING

CAD FILE NAME: LAT-DS-00899-07.dft

STANFORD LINEAR ACCELERATOR CENTER
U.S. DEPARTMENT OF ENERGY
STANFORD UNIVERSITY STANFORD, CALIFORNIA

		DATE	APPROVALS
ENGR	T. BORDEN		T. BORDEN
DWN	B.BHATNAGAR		R. JOHNSON
CHKR	T. BORDEN		A. BREZ
			D.NELSON

LAT TRACKER
TOWER ASSEMBLY
HVY CONVERTER TRAY ASSY
TALL TMCM ASSEMBLY

DRAWING NUMBER LAT-DS-00899

REVISION NUMBER 7

D

SH 3 OF 3

LAT TKR TRAY ASSY TMCM TALL

SLAC FORMAT V2.0