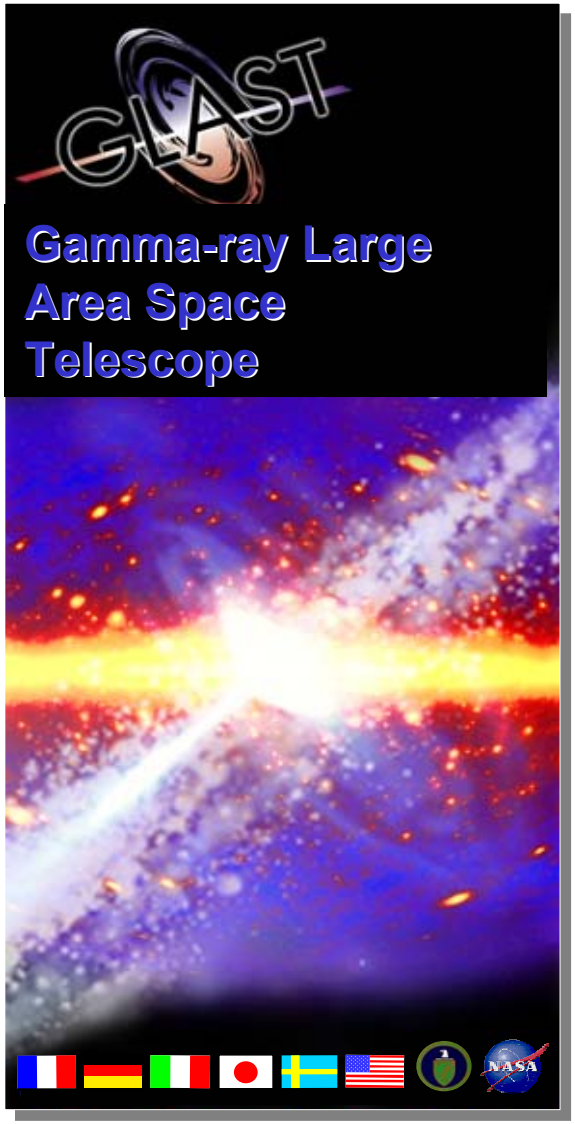

GLAST Large Area Telescope:

MGSE, Flight Integration HDWR,

Design / Status Review

Eric Gawehn
SU-SLAC
LAT I&T MGSE Dept. Manager

egawehn@slac.stanford.edu
650 – 926 – 3622 Office
650 – 796 – 2576 Cell

AGENDA

- Introduction
  - Scope
  - Review Goals and Ground Rules
  - Requirements Hierarchy
- MGSE Required for Assembly / Disassembly of the LAT (SLAC Ops)
  - List
  - Design Over View
    - Long Lead Items
      - Analyses Results
      - Single Failure Point Items
    - Readiness Verification
  - Schedule
    - Long Lead Items List
  - Summary
  - Additional Status
    - Two TWR ESA Beam Test Stand
    - Environmental Test Rotation Option

Introduction

- Scope
  - Provide detailed design / functionality of Long Lead I&T provided MGSE for LAT Integration (and De-Integration that is hopefully not needed !)
- Goals
  - Receive Constructive Comments regarding operations methodologies and MGSE capabilities
  - Obtain Authorization to Proceed (ATP) for Long Lead Procurements affecting Near Term Objectives (NTOs)
    - Obtain concurrence for MGSE sub-schedule milestones
  - Define Open Issues / Actions
- Ground Rules
  - Asking for Clarification is Good; Avoid Debates
  - Ask Specific Questions
    - If Questions aren't addressed adequately, Request Action Item
    - Write Down Action and Present for Management Concurrence
      - One issue per Action (Avoid several actions in one para. / essay)

MGSE NASA Requirements

- Requirements Hierarchy
  - GSFC Program Agreements (Approved RFA Responses)
    - GLAST LAT Performance Specification, LAT-SS-00010
    - GLAST Mission System Specification, GLAST00074
    - Mission Assurance Requirements Document for the Gamma-Ray Large Area Telescope, GLAST00110
      - GLAST SC / Delta II LV Interface Requirements Document, 433-IRD-003
      - General Environmental Verification Specification for STS & ELV Payloads, Subsystems and Components, GEVS – SE
      - NASA-STD-8719.9 Lifting Devices and Equipment
        - » Allows Project to Define Requirements Acceptable to NASA Program Office (Process can be labor intensive)

MGSE NASA Requirements, Cont.

- Requirements Hierarchy, Cont.

  - EWR – 127.1 East – West Range Safety Requirements
    - I&T Decision to avoid requirements development / Program Authorization cycle(s)
    - At CDR GSFC Directed that Lift Devices and Equipment have Factors of Safety (FoS) of 5 X Against Ultimate (More semantics than bite)
      - » Sounds more conservative than EWR 127.1
      - » Actual 127.1 Requirement is FoS of 3 X against Yield, if Yield Stress is < 85% of Ultimate Stress; If Yield Stress is > 85% of Ultimate, then FOS is 5 X against Ultimate
    - LAT will meet EWR 127.1 !

  - JSC - 22267 NASA / FLAGRO, or equiv
    - Invoked by EWR 127.1 for Single Failure Point Items

MGSE Requirements, Cont.

- Requirements Hierarchy, Continued
  - SLAC - I - 720 - 0A24E - 001 SLAC Seismic Spec.
  - LAT - TD - 00676, Rev. Current
    - LAT Integration Sequence
      - Top Level (Realized to be an Iterative working document)
        - » Detailed plans and procedures will likely find new needs for small items
  - LAT - TD - 01462, Rev Current
    - SLAC MGSE Development Plan (Requires Minor Update)
  - Reference Docs
    - NASA - STD - 5005A GSE
    - ASME B30.1 SLAC Requirements for Jacks
      - Consistent with EWR 127.1

MGSE Overview

Total of 31 MGSE items to be produced for LAT integration

- Big Hardware Items
  - Rotation Stand
  - Personnel Access Platforms
  - Grid Perimeter Ring (GPR); Primary support for LAT
  - Support Shaft-Flange Assemblies
  - GPR to Grid Support Brackets

- Drawings
  - Critical Path Detail Drawings are 80% complete
  - Detailed drawings are 55% complete
    - Drawing will be processed through CCB after completion of Formal Stress Analyses Reports
      - Structures will be signatories to CCB approval process

MGSE Overview

- Drawings, Continued
  - Interim Stress Analyses all Good to Go
    - Final Reports in Work –
      - Only need two more man weeks
    - MGSE that may be used at Launch Site
      - All Safety related MGSE data must be delivered to Spectrum Astro-Space for their inclusion into their Missile System Pre-Launch Safety Data Package (MSPSP)
      - Cape Canaveral Operations (SLAC Safety validation req'd)
        - » HDWR is not allowed on site until has been reviewed and Approved by the US Air Force / their designee
        - » Formal Data Package required at site 45 to 60 days prior to hardware arrival

- Concepts to be Presented today May Work for Calibration Unit Beam Test and Environmental Test
  - Propose Review of details <u>After</u> Integration Hardware and Analyses Mature

LAT Rotation Stand – Personnel Access Platform

- Design Philosophy
  - Maximize parallel work area in the Integration Hall
  - Minimize mechanical preparation for Flight work Ops
- Status
  - Two Concepts for Personal Access Platform are completed
  - No major issues
    - Primary Concept minimizes impact to work area, but impacted Integration Stand (aka LAT Rotation / Support Stand)
      - Minor impact; delays final detail drawings by ~ 10 to 15 days if Stress Analyses complete in parallel
    - Second Concept impacts work area and time for mechanical preparation Ops
      - Not part of presentation; In back up charts

- Issue – Both Concepts take up more Rm 104 “Real Estate” than desired
  - See Concept Views after Hardware List (please be patient)
    - Views do NOT imply detail drawing maturity; much work to do

LAT MGSE Review – Hdwr List

- LAT 4 x 4 Rotation / Support Stand (including drive system and flex coupling)
- GPR and GPR to Grid attach bracketry
- Support Shaft-Flange Assemblies, GPR to Rotation / Support Stand
- LAT Z Axis Vertical Lift Fixture
- LAT Z Axis Horizontal Lift Spreader
- 1 x 4 Lift Spreader Design
- Personnel Access Platform { Interfaces to Rotation Stand Weldment)
- Proof test weights for LAT Lift Fixture, GPR, GPR to Grid brackets, Support Shaft Flange Assemblies and Rotation Stand

LAT MGSE Review – Hdwr List, Cont.

- CAL –Z Up Lift Fixture, Complete and Ready for Use
- CAL +Z Up Lift Fixture, Design Complete, $700.00 to build
- TKR Lift Fixture – Provided by TKR
- TKR Alignment System
- Crane Scale; Calibrated and ready to use
- CAL Alignment Tool
- CAL Alignment Rods

LAT MGSE Review – Hdwr List, Cont

- TKR to TKR No Touch During Ascent Verification Tool
- TKR Cable Attachment to Bay Side Wall Tooling
- TKR Thermal Tie flex / positioning tool
- CAL Inversion Stand; Systems available for EM Series
- Metrology Bay for Shimming E-Box Height with respect to CAL Grid Interface – In Procurement
- ~~Metrology Bridge~~ – Goes away since Laser Trackers can do job
- LAT Z Axis Horizontal Support Braces

LAT MGSE Review – Hdwr List, Cont.

- Menning Plate Installation Equipment
- Interim Integration E-Box support brackets TBD
- Electrical Cable Connector Torque Tools
- Lift Fixture relocation dollies; Use Lead Stack dollies from EM Series
- ACD Low Profile Integration Stand
- Brackets to hold Lift Fixture Spreaders on top of Bonded Stores Containers

LAT MGSE Review – Hdwr List, Cont.

- Ambient Test Thermal Control System
  - Not part of this review
- 1 x 4 EM-Calibration Unit Rotation Stand
  - EM – Cal Rotation Stand to 1 x 4 Grid Interface Plates
- TWR (TKR, CAL, TEM, TEM PS) Mass Simulators
- Rotation Axis “Riser Block” Sub-Assys

LAT MGSE Review

DETAILS

LAT MGSE Review – Details

- LAT 4 x 4 Rotation / Support Stand (including drive system and flex coupling)
  - Design 90% complete; Detail Drawings about a 1.5 weeks away
  - Analysis shows compliance with EWR 127.1; More later
  - Primary Weldment Heavily Impacted by Personnel Access Platform
    - About 1.5 weeks to go for detailed drawings of Primary Support Structure (PSS)
      - PAP interface definition maturing nicely (detail drawings about two weeks after PSS)

- GPR and GPR to Grid attach bracketry
  - Analysis shows compliance with EWR 127.1
  - Design & Detail Drawings 99% complete (need final tolerance check and processing notes)
  - GPR increased along X Axis by 6” Total
    - Reduce risk while lifting GPR away from LAT
    - 92” x 96”GPR and GPR to Grid Fits within Existing MGSE Useable Envelope
      - No CCB Required !

- Support Shaft-Flange Assemblies, GPR to Rotation / Support Stand
  - Analysis shows compliance with EWR 127.1
  - Design & Detail Drawings Complete (need to design weld fixture)
  - Processing notes complete; Verified for EM & 1 x 4 Grid Shafts
  - 15-5 PH, Cond 1100

A Frame Stand with PAP, Small

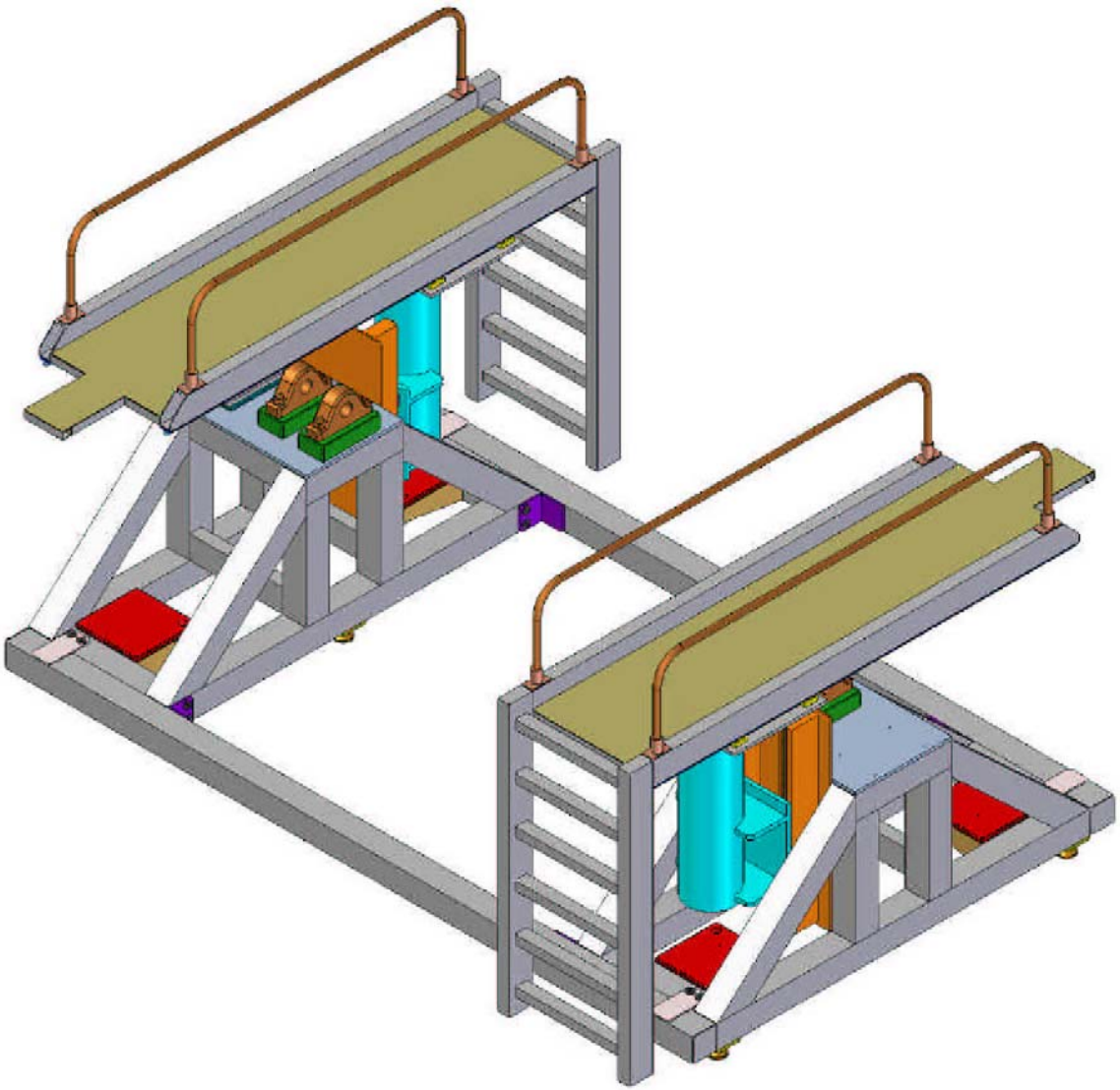

A Frame Stand with PAP, Small

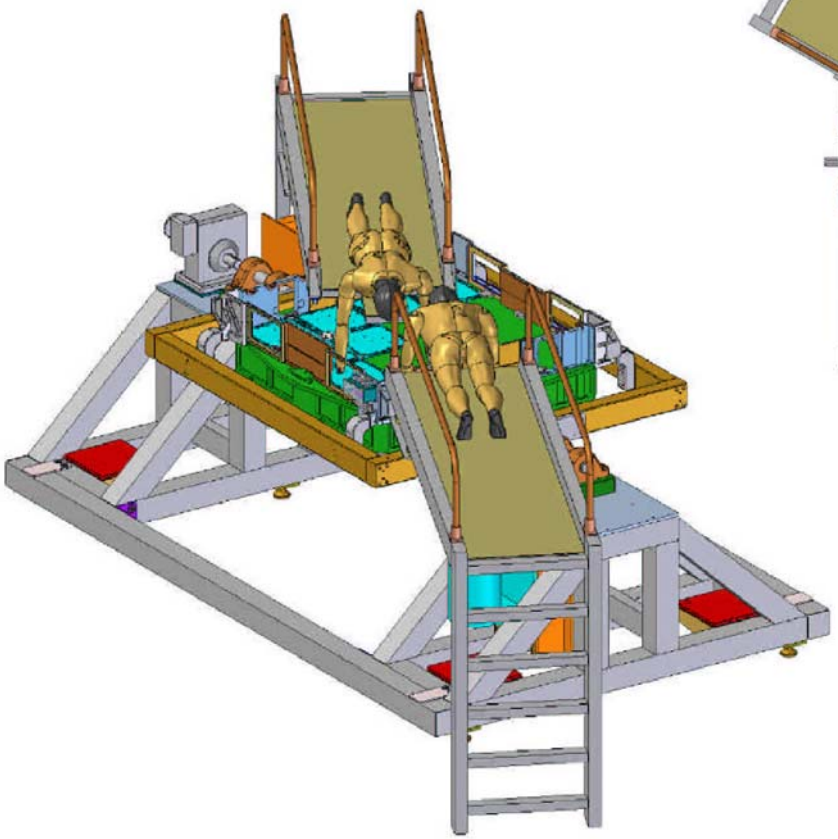

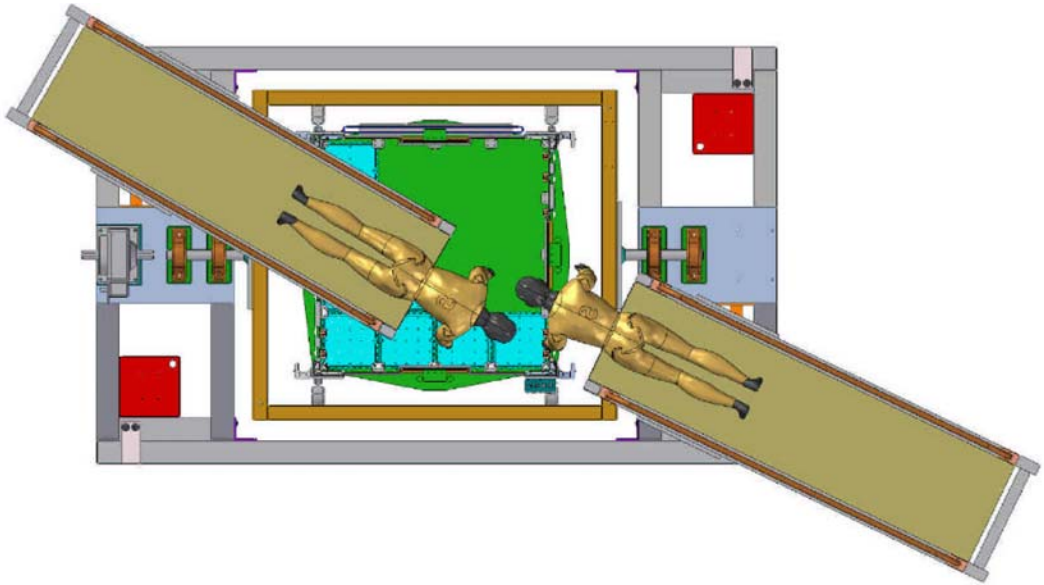

A Frame Stand with PAP, Small

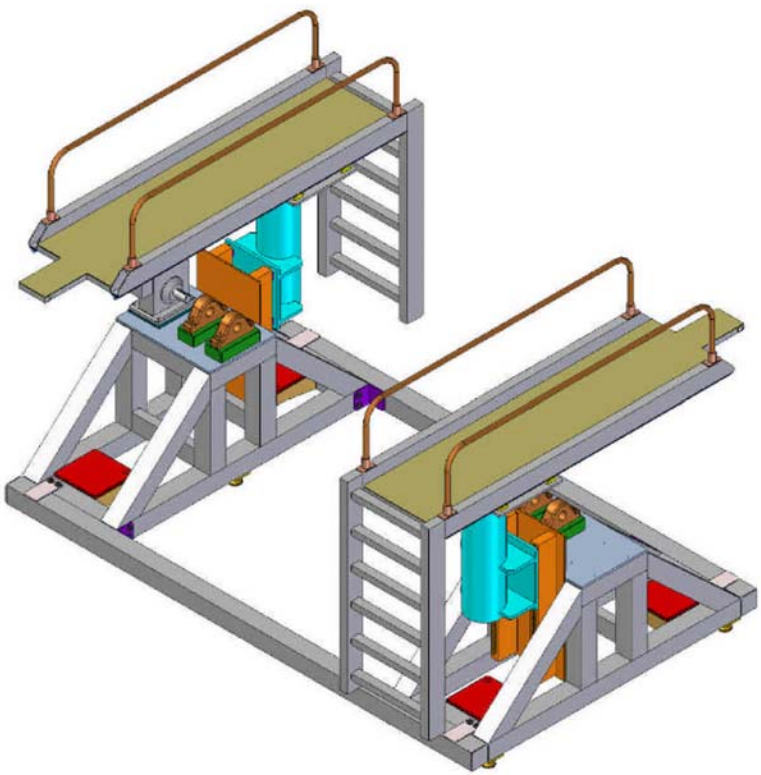

Personnel Platforms Up

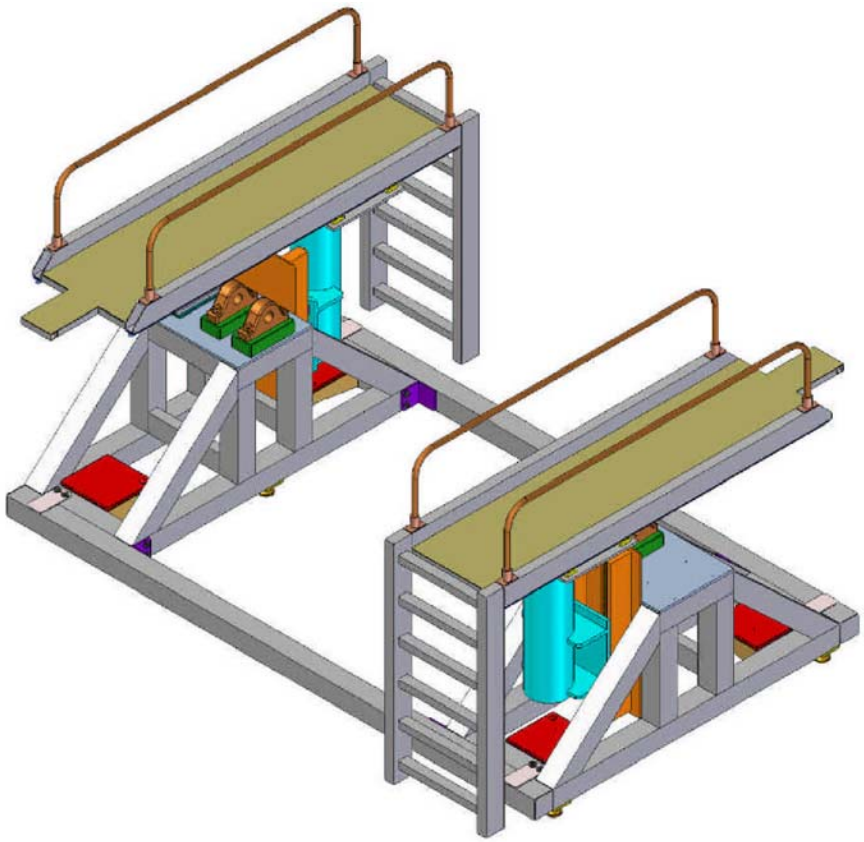

Personnel Platforms Down

A Frame Stand with PAP, Small

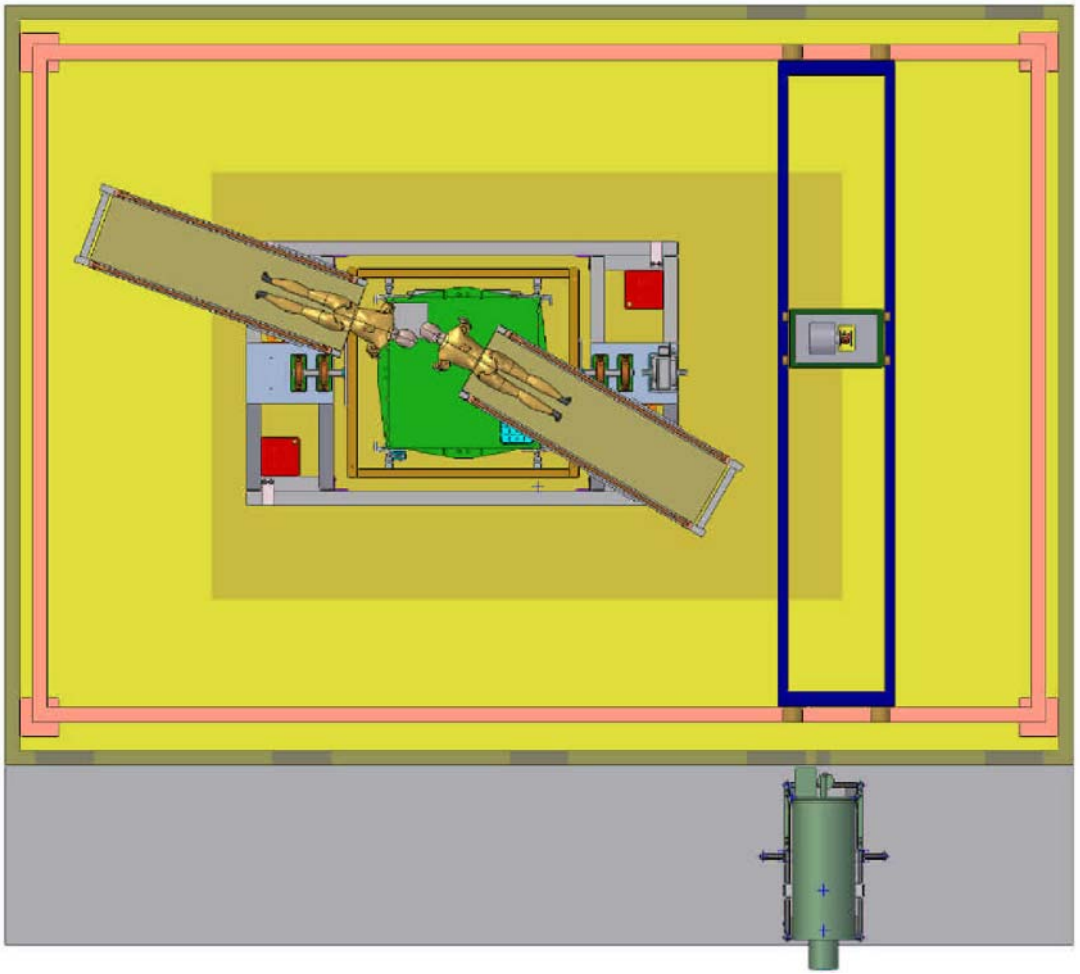

A Frame Stand with PAP, Small

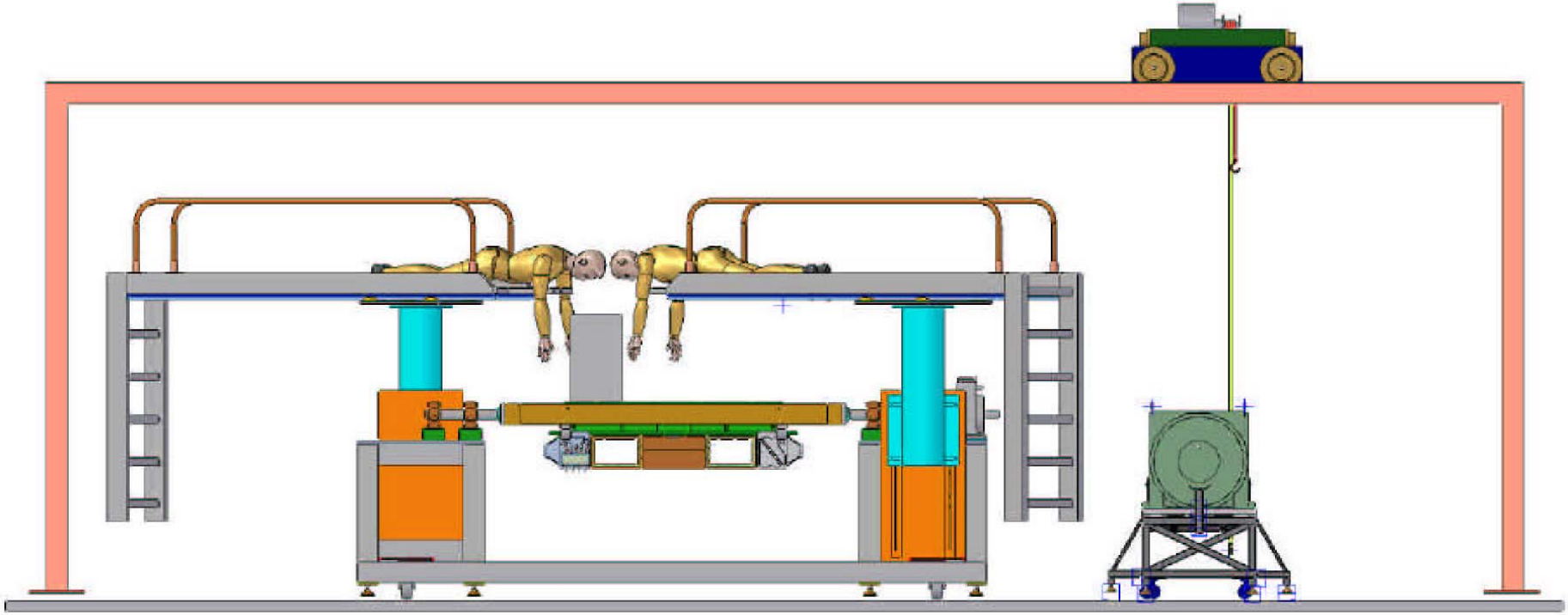

A Frame Stand with PAP, Small

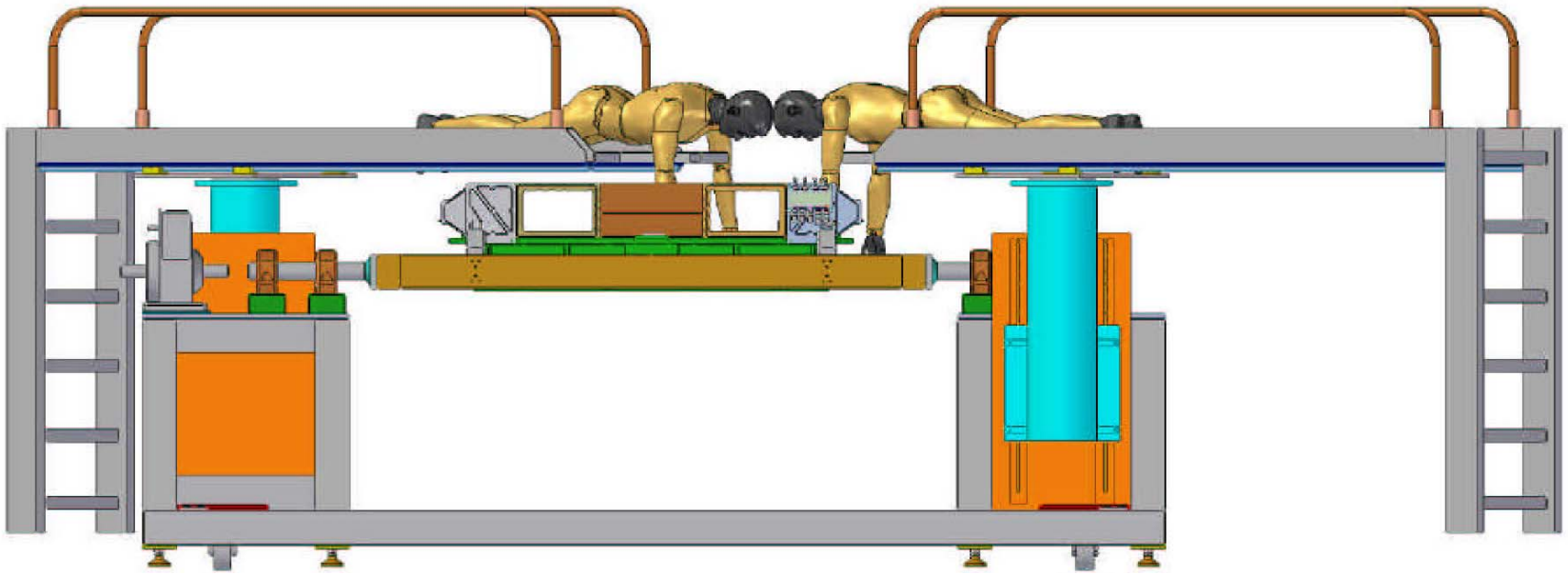

A Frame Stand with PAP, VdG

Rough Look More Accurate Layouts Are Needed

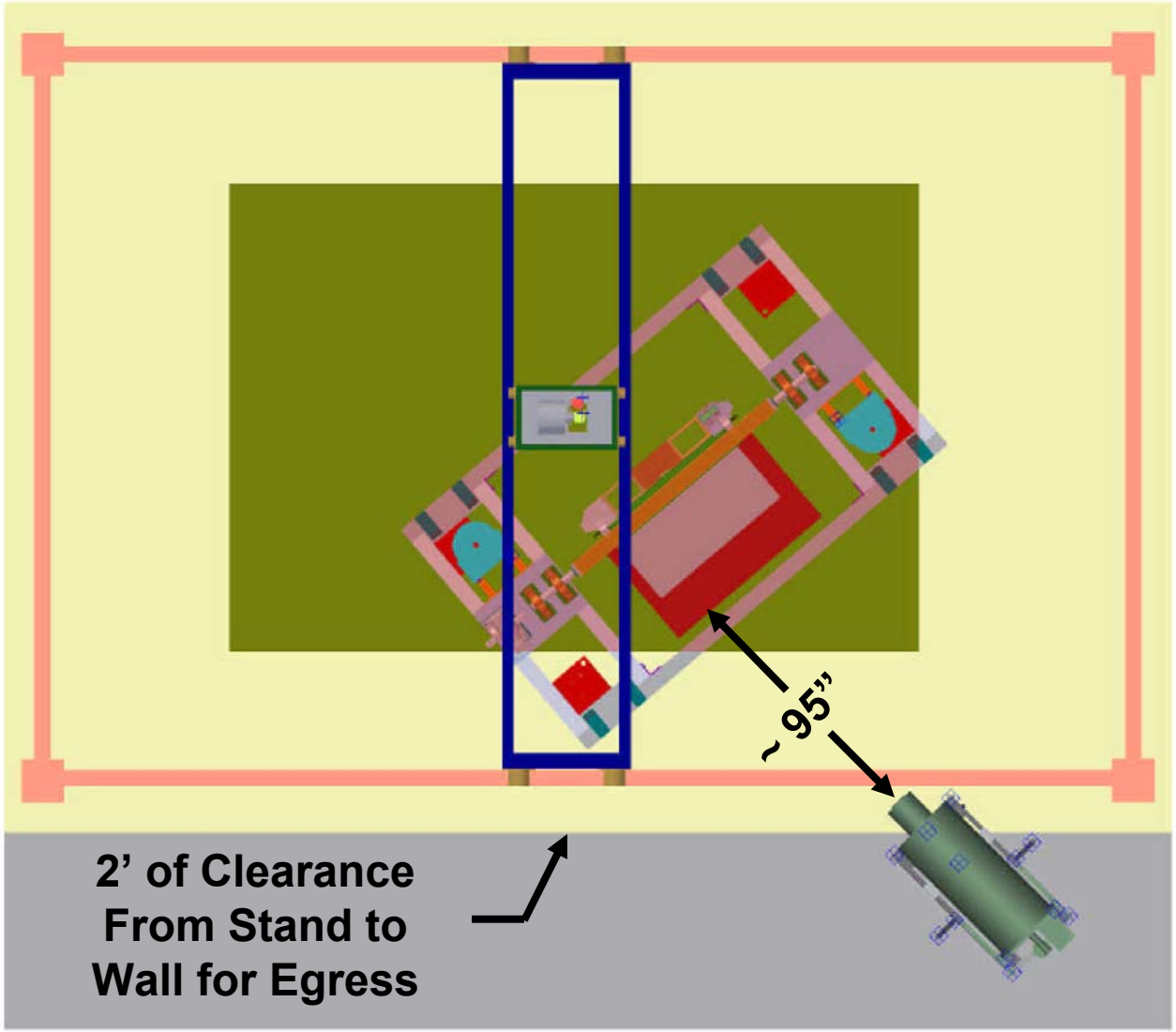

4x4 Integration Stand Budget - Cost Summary

- **PMCS Budget**
  - Integration Stand Total $78K
  - GPR $9.5K
  - LAT Z Up Lift Fixture $8.7K
  - CU Beam Test Stand none

  Total Budgeted $96.2K
- **Current Cost Estimates**
  - GPR $16.2K
  - Support Shaft-Flange Assemblies $7.5K
  - 4x4 Integration Stand (See IDL for Breakdown) $57.9K
    - Includes Support Stand and PAP

  Total Mature Estimate $81.6K

Total Delta (+ = available to use for other MGSE) + $14.6K

LAT Support Structure; GPR, Support Shafts & Brackets

- Design Philosophy
  - Bolt together frame
  - Precise bracketry with Respect to Grid Attach Interface
- Status
  - Detailed Drawings of all pieces 100% Complete
  - Stress Analysis completed and shows compliance to EWR 127.1 (> 5 x against Ultimate)
- Issues
  - Interference with heater control box connector is resolved
    - Need to review Clevice Pin Removal Access Envelope
      - Requires update to MGSE Allowable Envelope for SLAC Use Only ?
        - » Technically speaking, considered minor issue

GPR Complete

GPR Corners Held Together Using Four ea ½" 180 KSI Bolts into Keenserts

Each Corner Includes Two Capped Tapered Pins for Shear and Re-Assy Alignment

Support Shaft Flange Assys Held to GPR by Eight ea 180 KSI Bolts into Keenserts

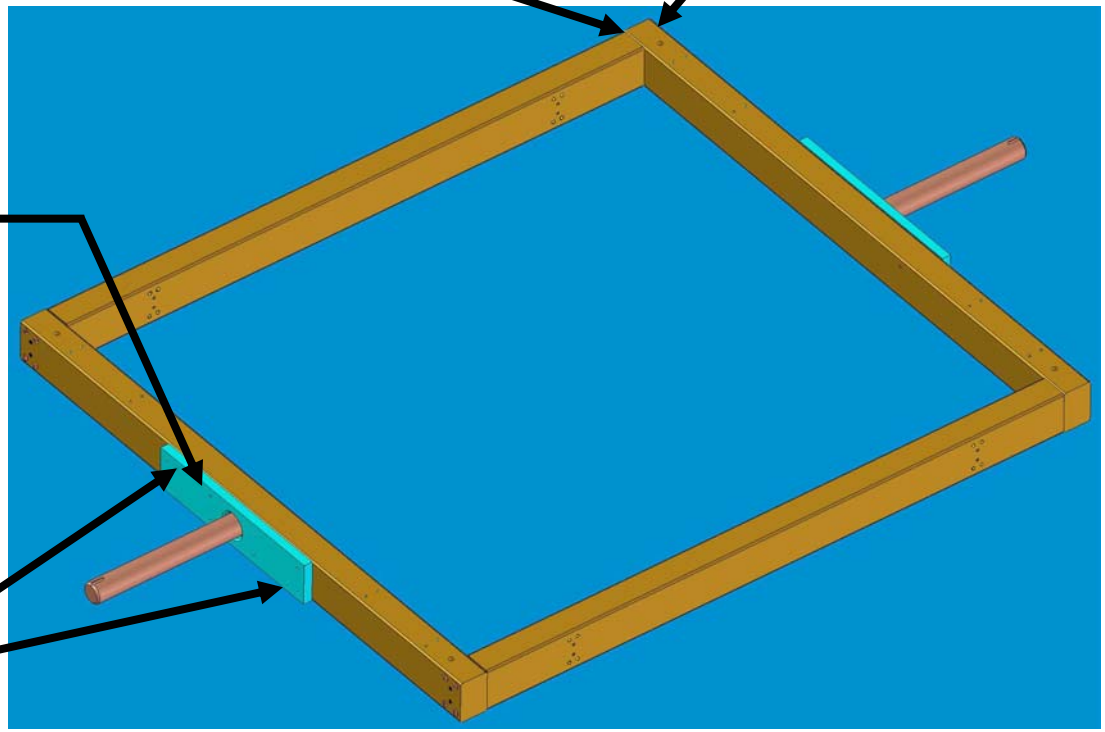

Two Capped Tapered Pins for Shear and Re-Assy Alignment

LAT MGSE Review – Hdwr List

- **GPR Corner Attach Design**
  - **Same concept used for GPR to Grid Attach Brackets and for T-Vac Stand**

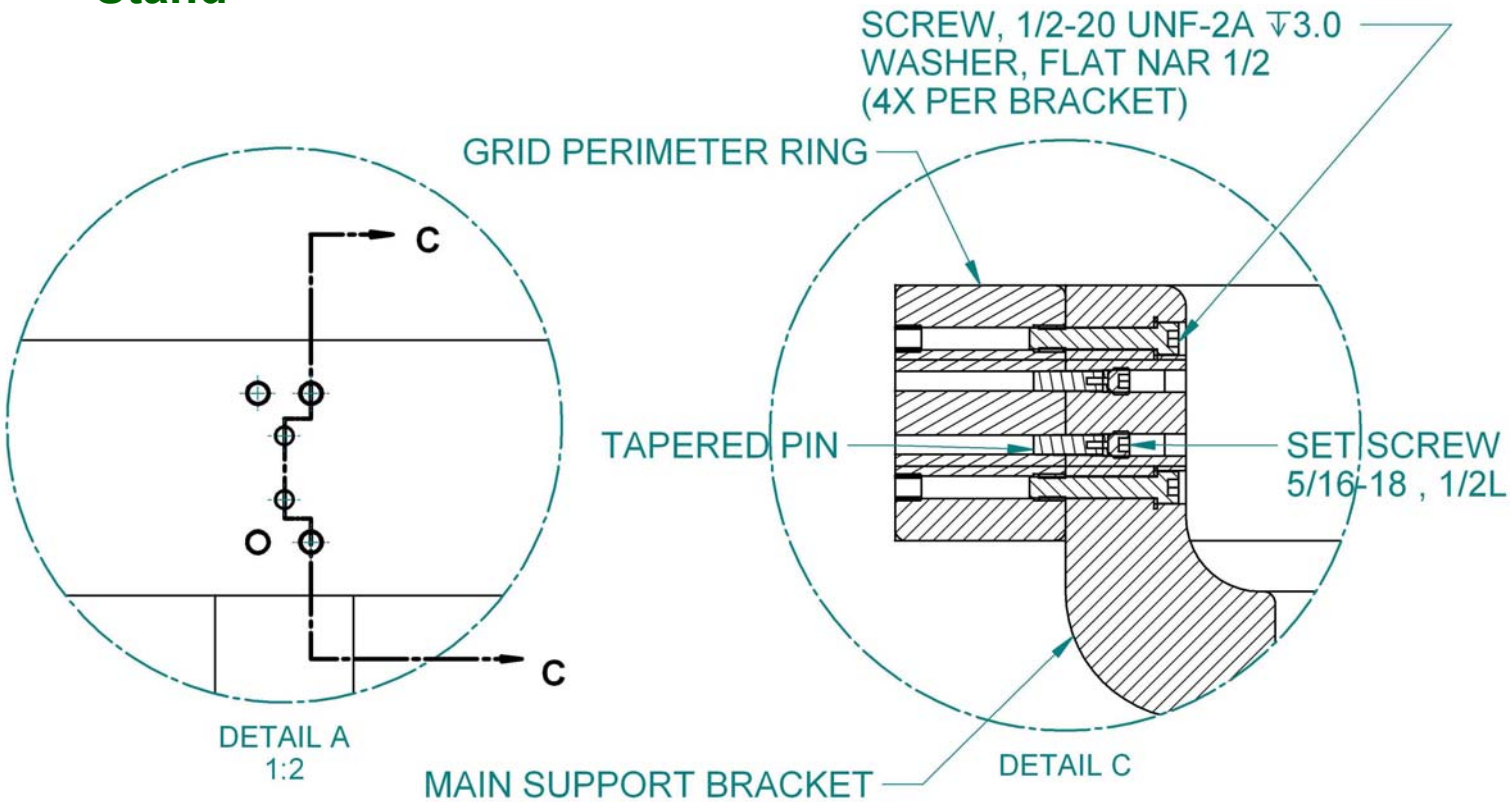

LAT Support Shaft / Flange Assys

- Fabricated of 15-5 Precipitation Hardened Corrosion Resisting Steel
  - Cond 1100 (ºC) Material Properties
    - Yield Strength of 115 KSI
    - Ultimate Strength of 140 KSI
    - Weld and Heat Treatment Process
      - Defined and verified for EM-1 Series; Shafts are beautiful !
      - SLAC Welders though not specifically certified know how to do it
      - Weld rod is expensive and in house (with certs)
      - SLAC Furnace is much lower cost that outside vendors
      - SLAC Furnace is large enough to do Rotation Stand Shaft-Flange Assys and Z Axis Horizontal Lift Spreader all at the same time
  - Only about 20% more expensive than steel if purchased from Fry Steel Co.
    - Material Composition Analysis and Proof Test Certifications are free if requested at time of purchase
    - Other vendors are much more expensive

LAT Support Shaft / Flange Assys

- Shaft and Flanges are 15-5 PH
  - Annealed condition at receipt of raw materials
  - Machined prior to welding operation
  - Post weld Heat Treatment: Anneal then Precipitation Harden to Cond 1100; About 2.5 days of processing
  - Post Heat Treatment final machining to ensure perpendicularity of shafts to flange

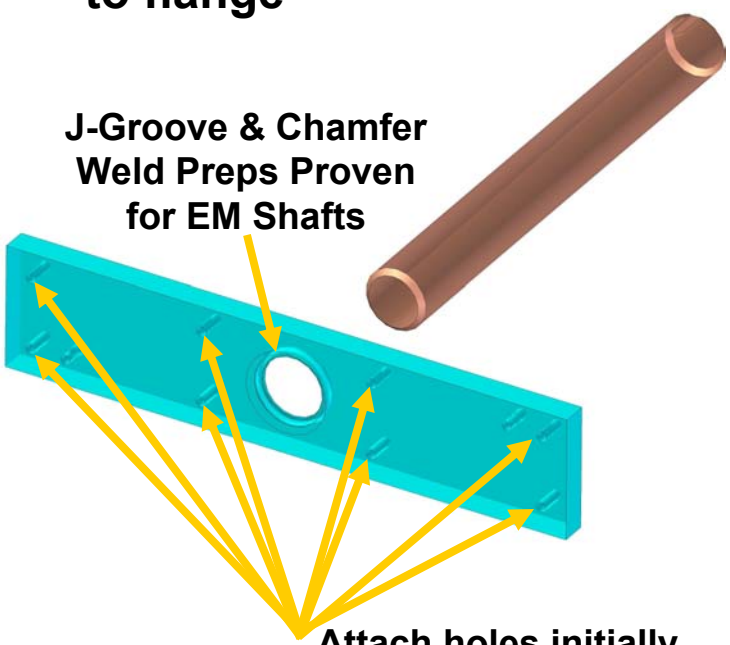

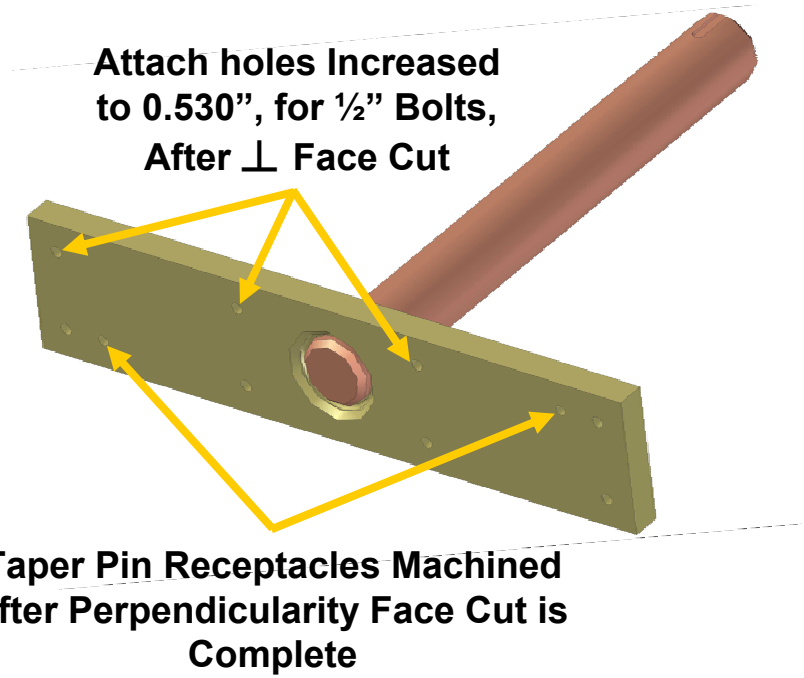

LAT Support Shaft / Flange Assys

- Pre weld machine, weldment, post heat treat machining drawings are ready for CCB release cycle
  - Stress Analysis result Good to Go; More detail later in presentation
- Cost
  - Shafts
    - Two pieces 3” OD by 30” long each ~ 120 lbs
    - $3.43 / lb + $8.00 cut charge; Total ~ $420.00
  - Flanges
    - Two pieces 30” long by 6” wide by 1.3 thick ~ 140 lbs
    - $4.30 / lb + $8.00 cut charge; Total ~ $600.00
  - Shipping $30.00 / 70 lbs
    - 120 lbs + 140 lbs = 260 lbs; 260 / 70 = 3.7; 4 x $30.00 = $120.00
  - Total Raw Material, Shaft-Flange Assy, Cost $1,140.00

LAT Support Shaft / Flange Assys

- Pre-weld machine preps (Diamond Tool & Die) ~ $1,000.00
- Welding & Cleaning ~ $1,400.00
- Anneal & Heat Treat ~ $1,400.00
- Post Heat Treat Machining ~ $2,200.00
- Dye Penetrant inspections (pre & post proof test total) ~ $200.00
- Post Dye Penetrant Test Passivation ~ $150.00

  - Total Processing Cost ~ $6,350.00

- Total cost of Shaft-Flange Assemblies:

  ~ $1,140.00 + $6,350.00 = $7,490.00

Grid Perimeter Ring & Attach to Grid Brackets

Prior design for 86” by 96” GPR, GPR to Grid Attach Bracket

New design for 92” by 96” GPR, GPR to Grid Attach Bracket

Stress: Good to Go

Same Raw Material Al, 6061 – T6

New design is 3” longer along X Direction

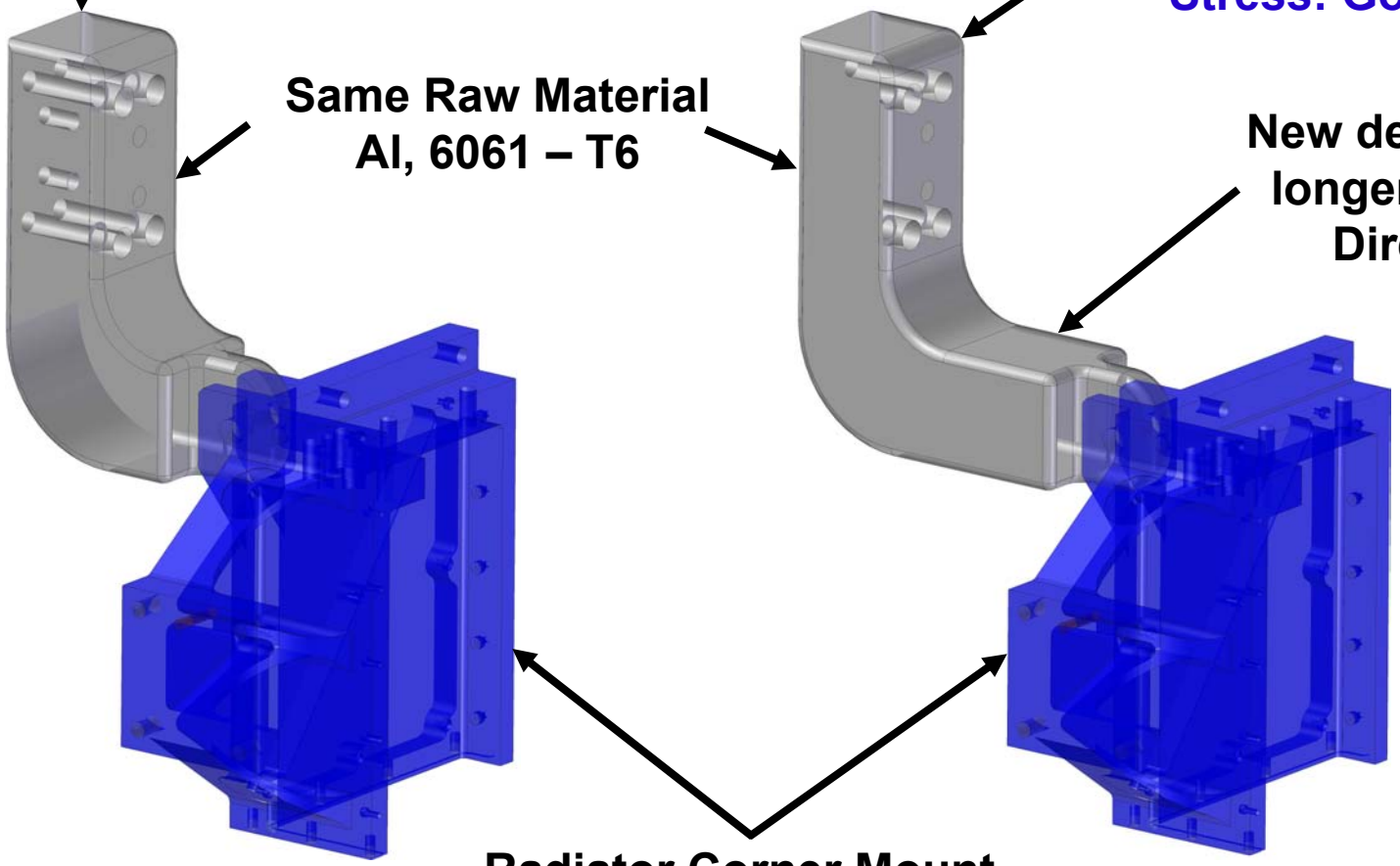

Radiator Corner Mount Bracket

Grid Perimeter Ring & Attach to Grid Brackets

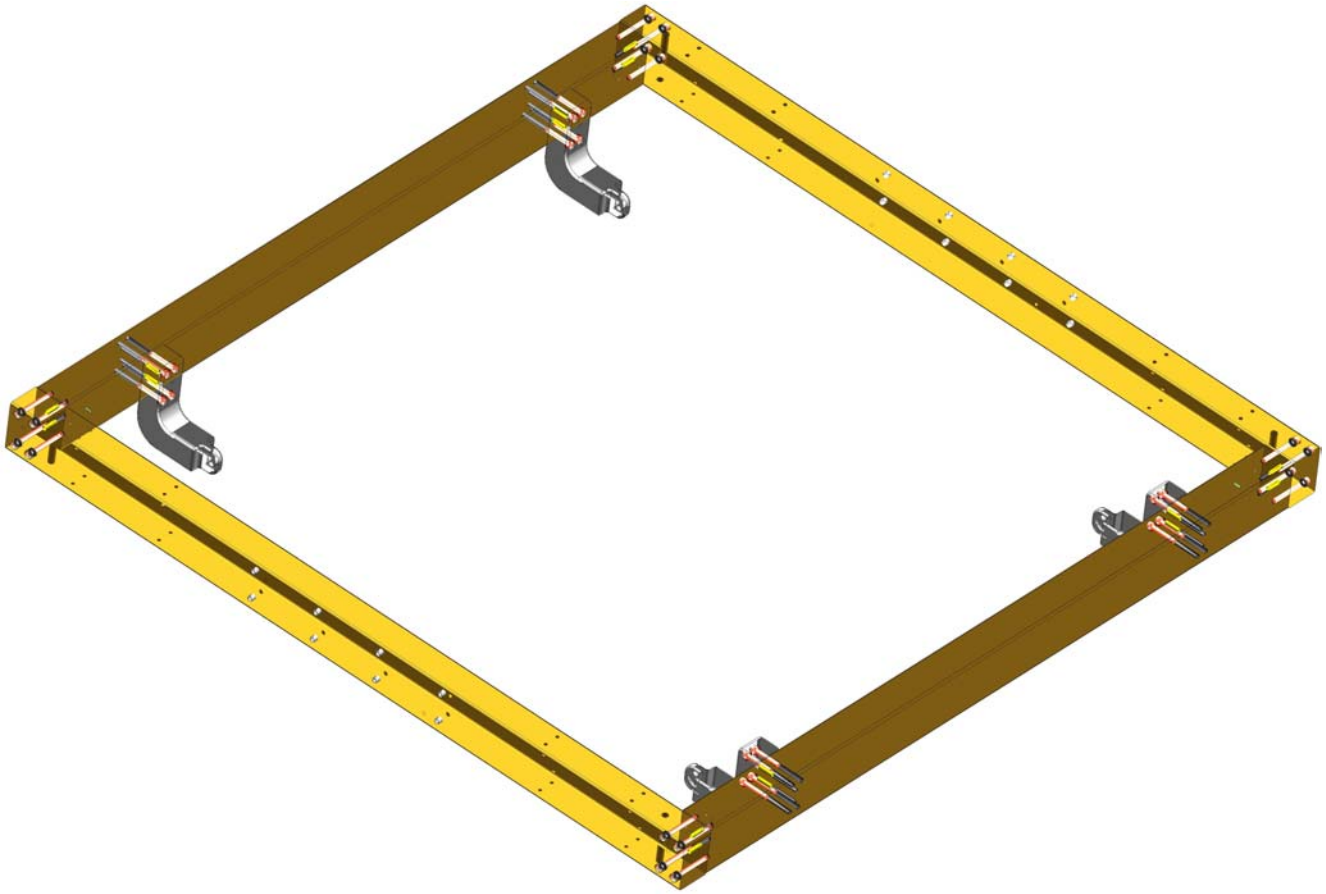

Grid Perimeter Ring & Attach to Grid Brackets

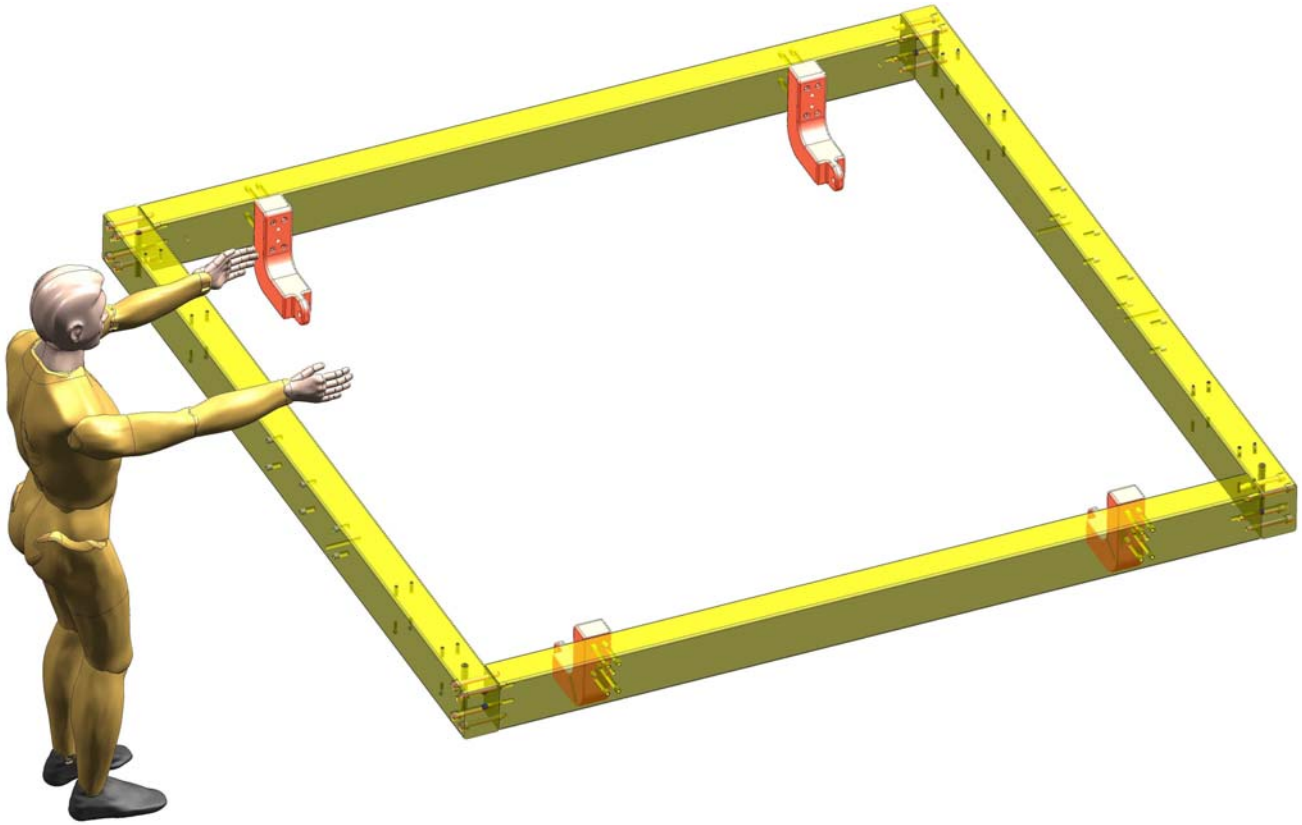

Grid Perimeter Ring & Attach to Grid Brackets

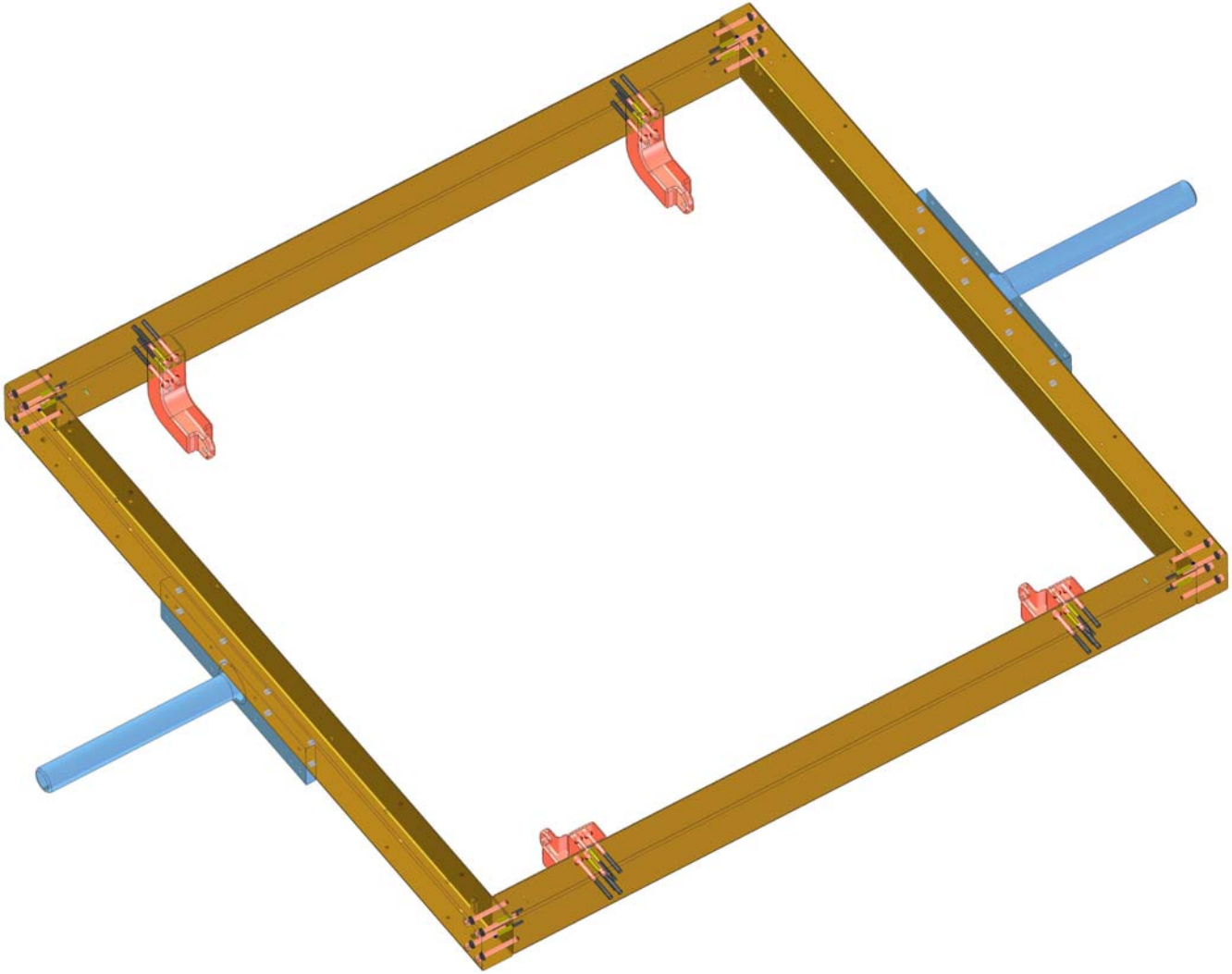

Grid Perimeter Ring & Attach to Grid Brackets

Top Looking Down View

Grid attached to GPR - Brackets

92” x 96” GPR

We Now Have Similar Working Clearances on X and Y sides of LAT

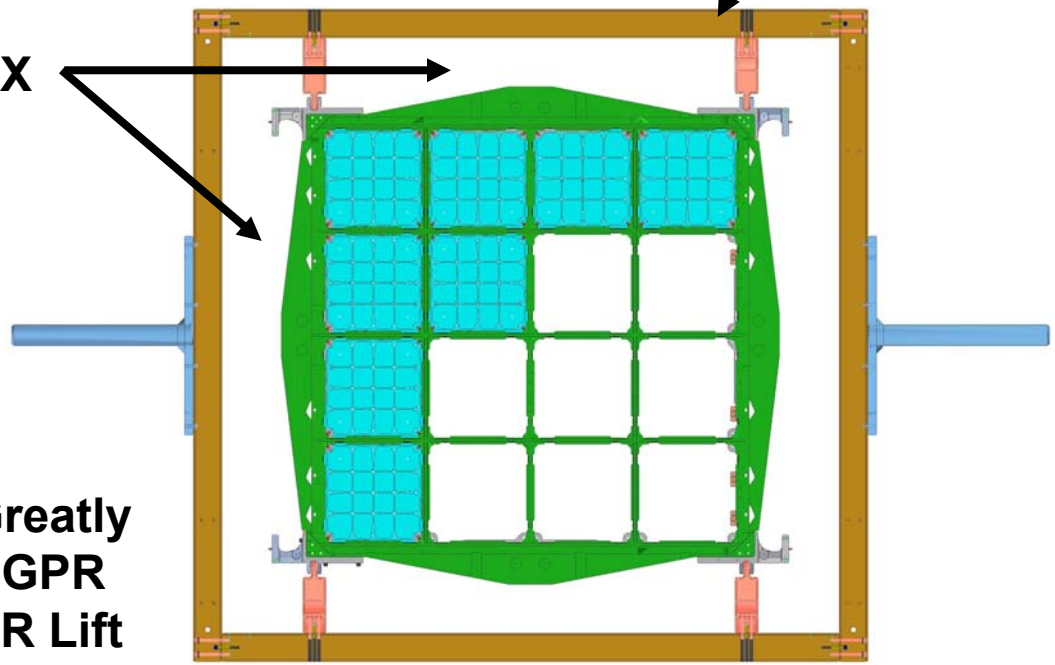

Working Clearance Will Greatly Reduce Risk to ACD for GPR Bracket Removal and GPR Lift Away Ops

Grid Perimeter Ring & Attach to Grid Brackets

Side View, 92” x 96” GPR

GPR-Brackets with Grid, RCMBs and EMI Skirt Sections

Grid Perimeter Ring & Attach to Grid Brackets

92” x 96” GPR in LAT Integration Stand

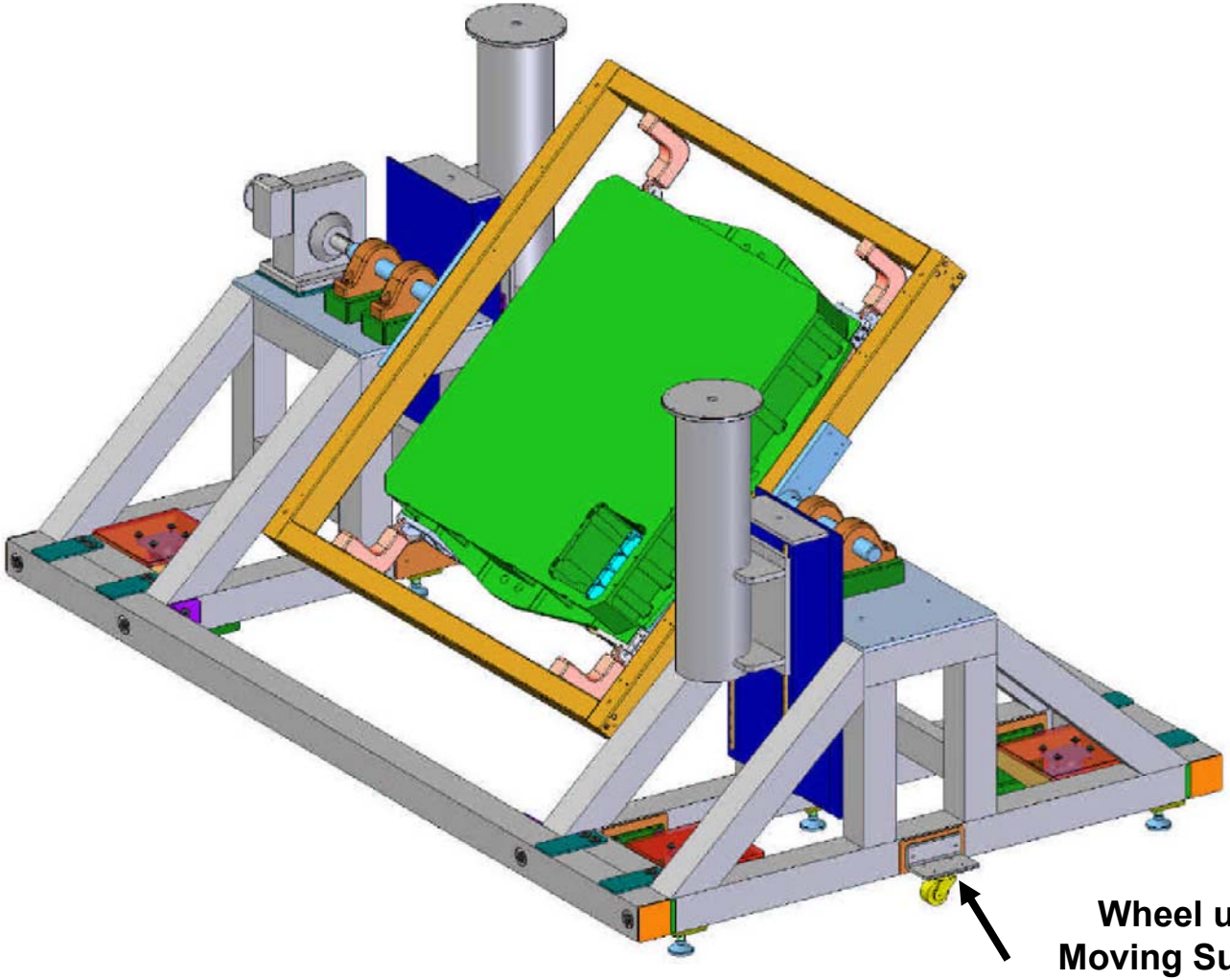

Wheel used only when Moving Support Ends After Stand Disassembly

Grid Perimeter Ring & Attach to Grid Brackets

92” x 96” GPR in LAT Integration Stand

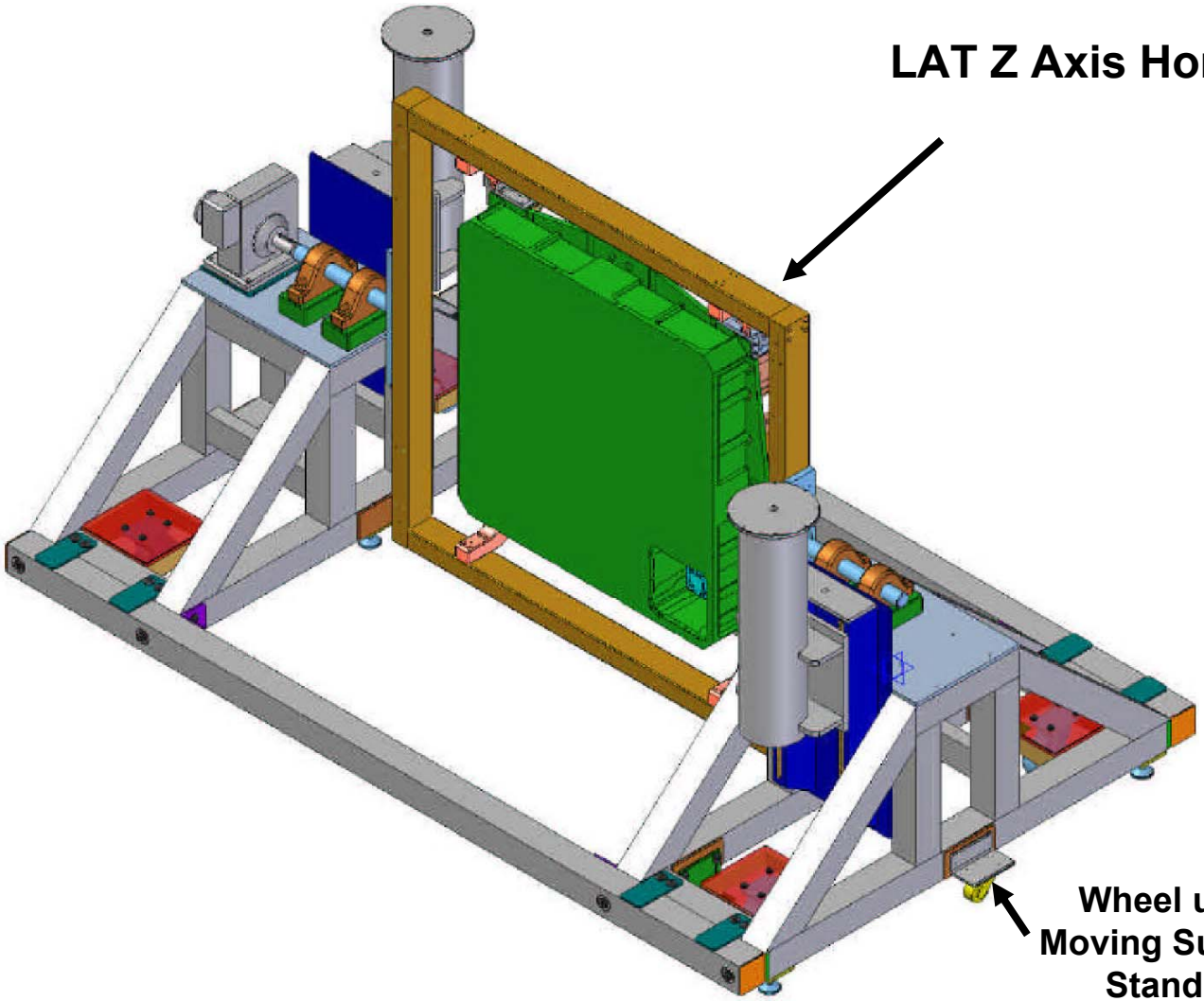

Grid Perimeter Ring & Attach to Grid Brackets, Cont.

- Allied Engineering and Production Co estimates:
  - Total machining time GPR and GPR to Grid attach brackets ~ 96 hr at $107.00 / hr = $10,272.00
    - Final machining of Clevice tabs can be done as an assembly
      - Virtually ensures fit to Grid, especially if Grid 'As Built' Dims are known and can be fed to Allied prior to final machining
      - Is this level of precision required ?
  - Raw Material Cost (GPR & Brackets) ~ $4,200.00
  - Anodize GPR beams $670.00
  - Anodize brackets at SLAC $250.00
  - Transport box, foam, packaging and freight ~ $750.00

Total ~ $16,150.00

- Cost is ~ $6K higher than originally planned
  - Biggest cost driver is difficulty moving heavy articles around machine and surface coating shops
  - Didn't consider transport box and freight
  - Raw materials informal estimate a year ago was $2,800.00

Grid Perimeter Ring & Attach to Grid Brackets

- Detail design is 100 % Complete; drawings are in Check Cycle
  - Plan to remove raw material acceptable void inspection
    - Saves about $1,200.00
  - Plan was to purchase 6.25” by 4.25” plate and cut lengths
    - 4.25” thick plate was available last year
    - 4.0” and / or 4.5” thick plate is available now
    - If we use 4.0” plate, width of GPR beams may reduce to 3.8”
      - Stress Analysis indicates final width of 3.8” will meet strength requirements with required Factors of Safety; More detail later in presentation

LAT Integration Stand Rotation Drive Detail

- Double Worm Gear Drive; Winsmith 951 Series
  - Selected Part Number 951 MDBD2000 RDL 56C
    - 2000 : 1 Ratio
      - Output RPM with 1760 RPM Input Motor : 0.88 RPM
        - » Time for 180º Rotation ~ 34 Seconds [(1 ÷ 0.88) ÷ (2) x 60 =]
        - » Tip Speed of Outermost Corner of GPR :
        - » (0.88 ÷ 60) 2 л = 0.092 rads/sec;
        - » V = rω → (0.092 rads/sec) (46 in) = 4.2 in/sec
      - Output RPM with 1160 RPM Input Motor : 0.58 RPM
        - » Time for 180º Rotation ~ 52 seconds
        - » Tip Speed of Outermost Corner of GPR :
        - » (0.58 ÷ 60) 2 л = 0.061 rads/sec;
        - » V = rω → (0.061 rads/sec) (46 in) = 2.8 in/sec
    - Max Continuous Torque : 23,200 in lbs
      - High Torque can Reduce QTY of TKR-CAL Mass Simulators

LAT Integration Stand Rotation Drive Detail

- Double Worm Gear Drive; Winsmith 951 Series, Continued
  - Max Output Shaft Thrust : 6,800 lbs
  - Max Output Shaft Overhung Load : 7,035 lbs
    - Unnecessary Risk with Respect to Earthquake
      - Not worth Analysis time
      - Go with Moment managing Pillow Block Bearings
  - Gear Lash
    - Standard OTS : 11 to 17 Arc – Minutes
      - 17 minutes ÷ 60 minutes/º (л rads / 180º) = 0.005 rads
        - » S = rθ rads ; 0.005 rads (46 in radius) = 0.227” Lash at GPR’s Outermost edge
  - Lead Time : 2 Months
    - Cost : $6,600.00 with Improved Paint Over Coat

Rotation Drive Detail, Cont.

- **Bearings**
  - Reaction Force bearing housing must accommodate
    - Max (from Earthquake) is 20,500 LBS Vertically Up
  - Split Bearing Part No. SP4B517-SAFS-300TT can react 39.9 K lbs
  - Lead Time 5 to 8 weeks
  - Cost : $770.00 ea x 4 = $3,080.00

Split Top Attached to Housing with Two 5/8-11 UNC-2A X 3-1/4" Long GRADE 8.3 Bolts

Each Housing Attached to Stand with Four 5/8" by TBD Long Bolts

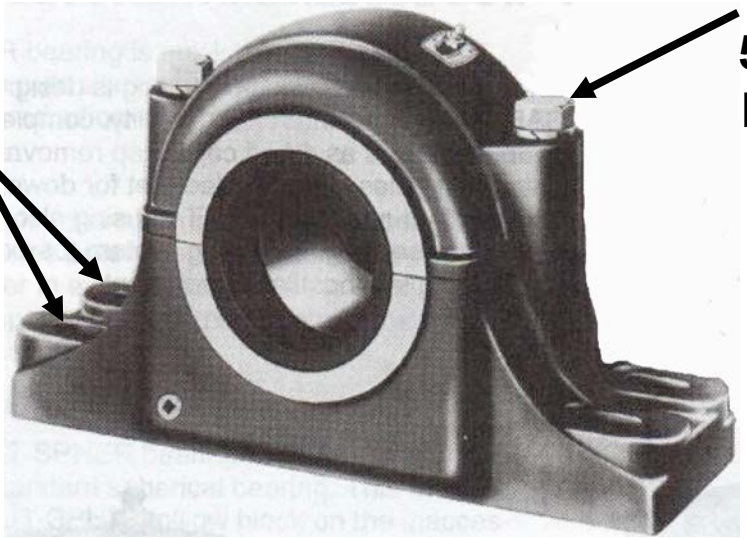

Rotation Drive Detail, Cont.

- **Bearing Attach Fasteners**
  - Grade 8 by TBD –UNF TBD Threads/in
  - Material Composition Analysis and Proof Test Certifications Required
    - Will add about $250.00 to cost of bolts

- **Flanged Flex - Flex Gear Coupling (for min lash; Mfr LoveJoy Corp)**
  - Torque capability, Type F Gear Coupling, Flex – Flex 94,500 in lbs
  - Max Mis-Alignment : 0.115” @ 4,000 RPM
  - Lead Time: 6 Weeks
  - Cost : $750.00

LAT MGSE Review – Details

- **Z Axis Vertical Lift Fixture**

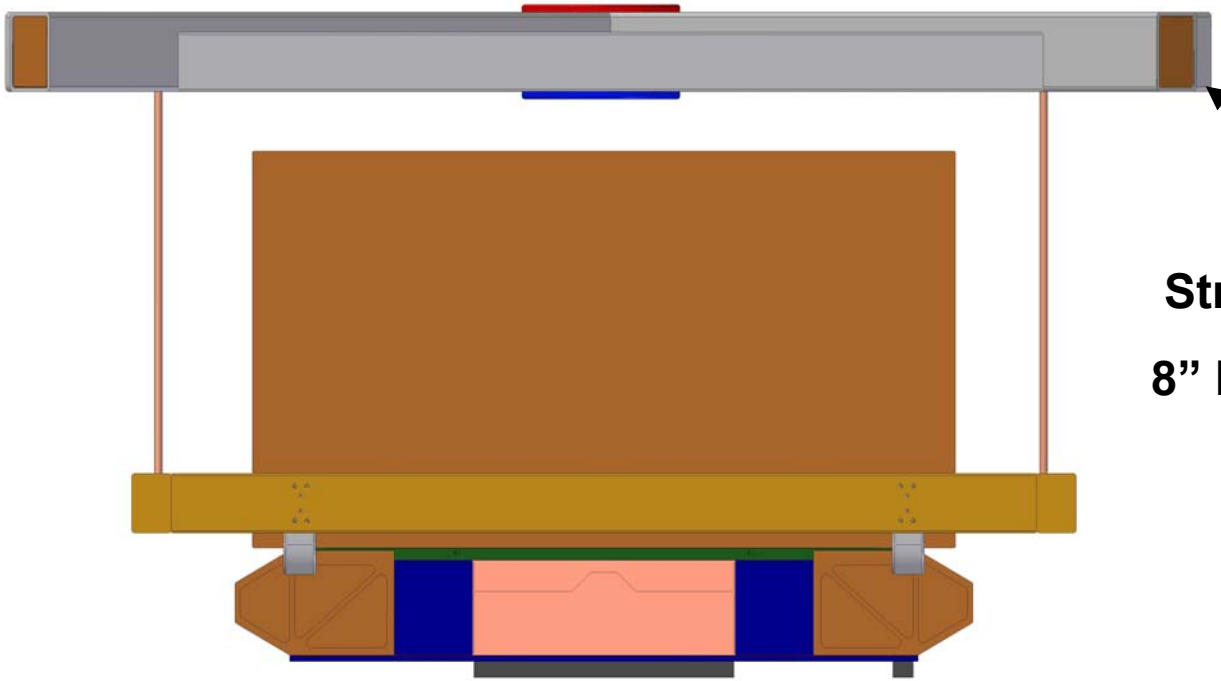

Structural Box Beam

8” High by 6” Wide by 0.38” Thick

LAT MGSE Review - Z Axis Up Lift

- Z Axis Vertical Lift Fixture

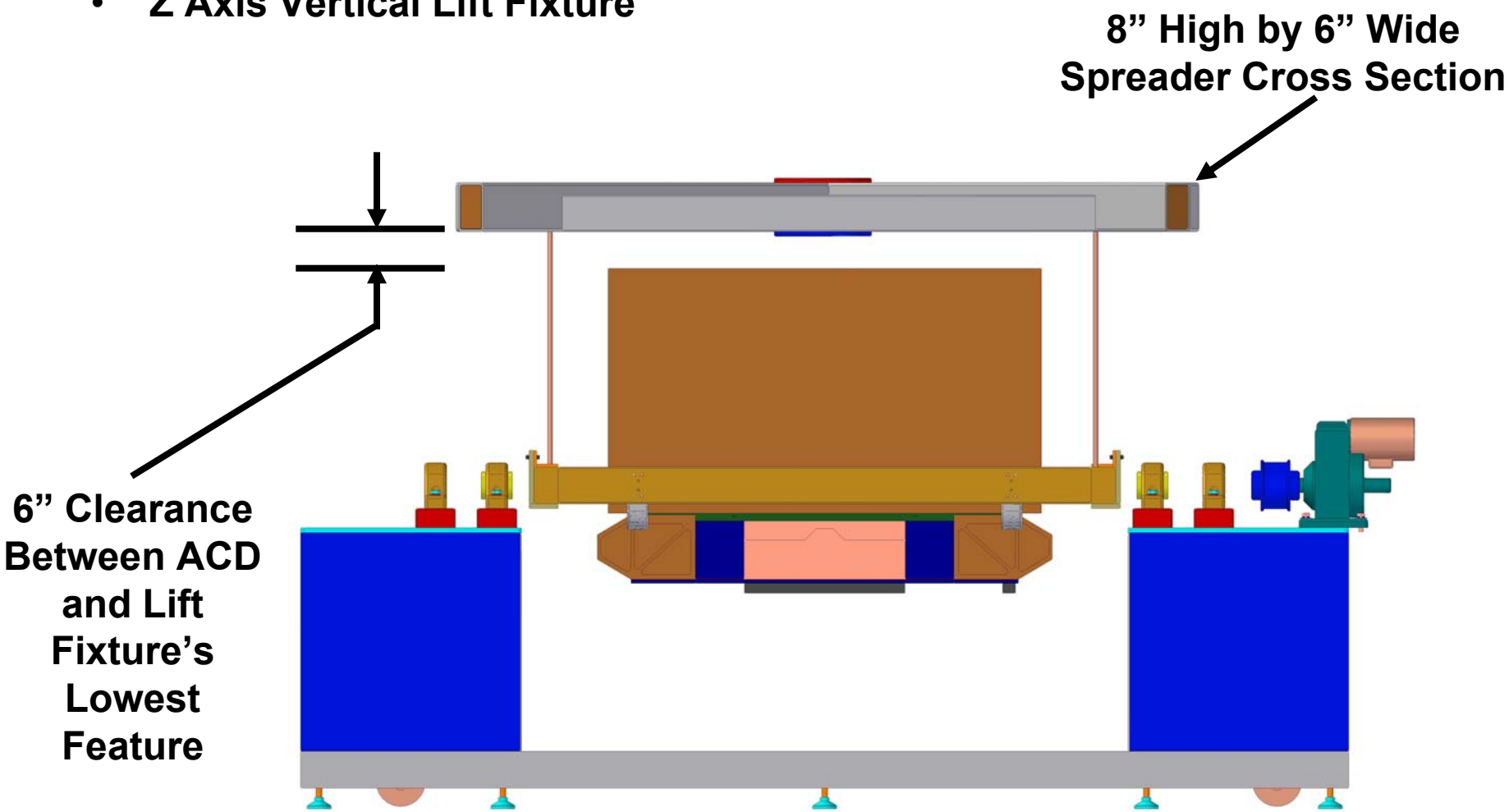

CDR Rotation Stand Concept; Same Rotation Axis Height as PAP Stand

LAT MGSE Review – Details

- LAT Z Axis Vertical Lift Fixture; Design TBD% complete
  - Need to define Turnbuckles (3/4" CRES 316) and attach rod lengths
    - ¾" OTS Turnbuckles Rated for 5,200 lbs each
  - Analysis status: Solution for 8" High by 6" Wide Spreader
    - Model is 95% Complete
    - Detail Drawings ~ 15% Complete
    - Estimated cost ~ $15K
      - $8.7K in current budget

LAT MGSE Review – Details, Cont.

- LAT Z Axis Horizontal Lift Spreader
  - Analysis shows compliance with EWR 127.1
  - Design & Detail Drawings 75% complete (need final tolerance check and material processing notes)
  - Beefy Cross-Section 11” High by 3” thick
  - A36 Steel Solution, Drawings in work

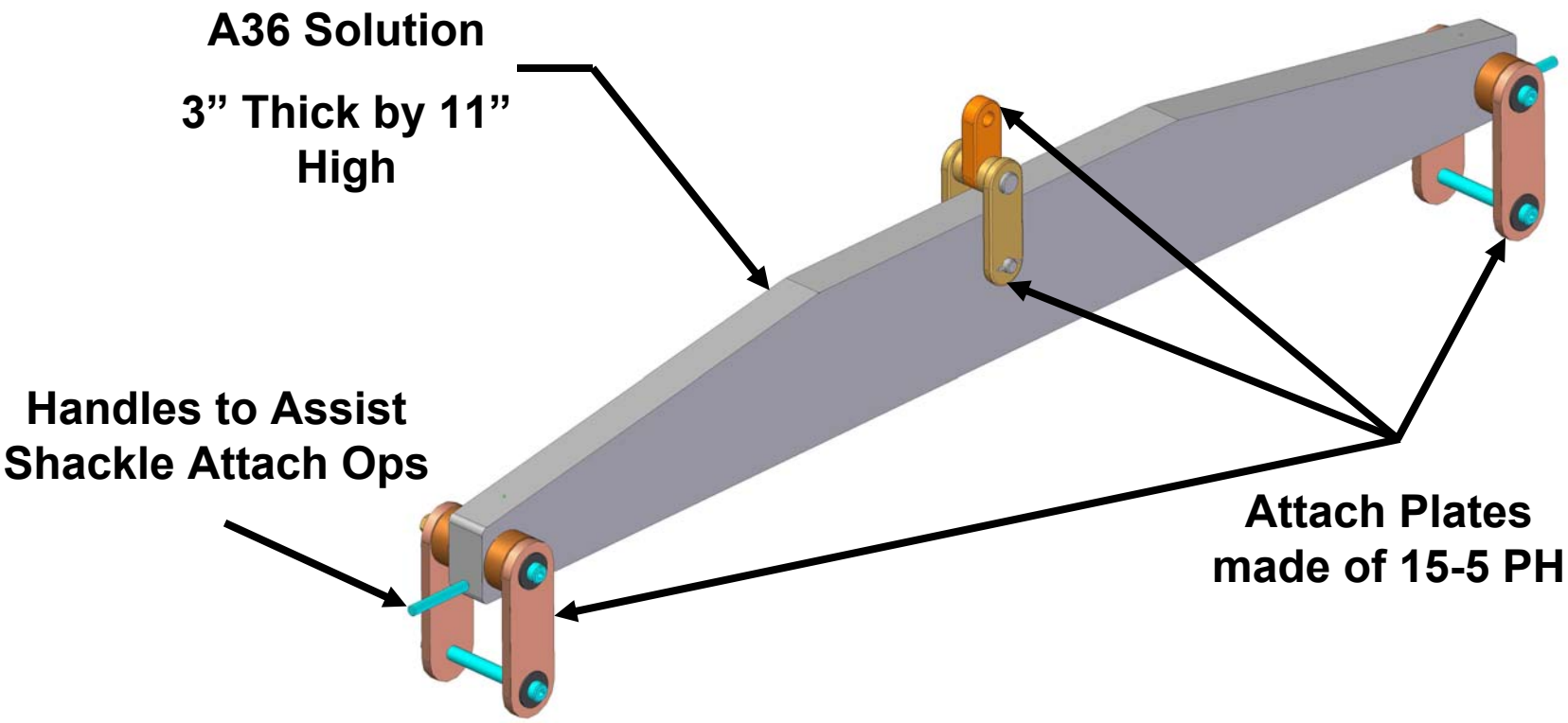

LAT Z Axis Horizontal Lift Spreader

Side View with Grid

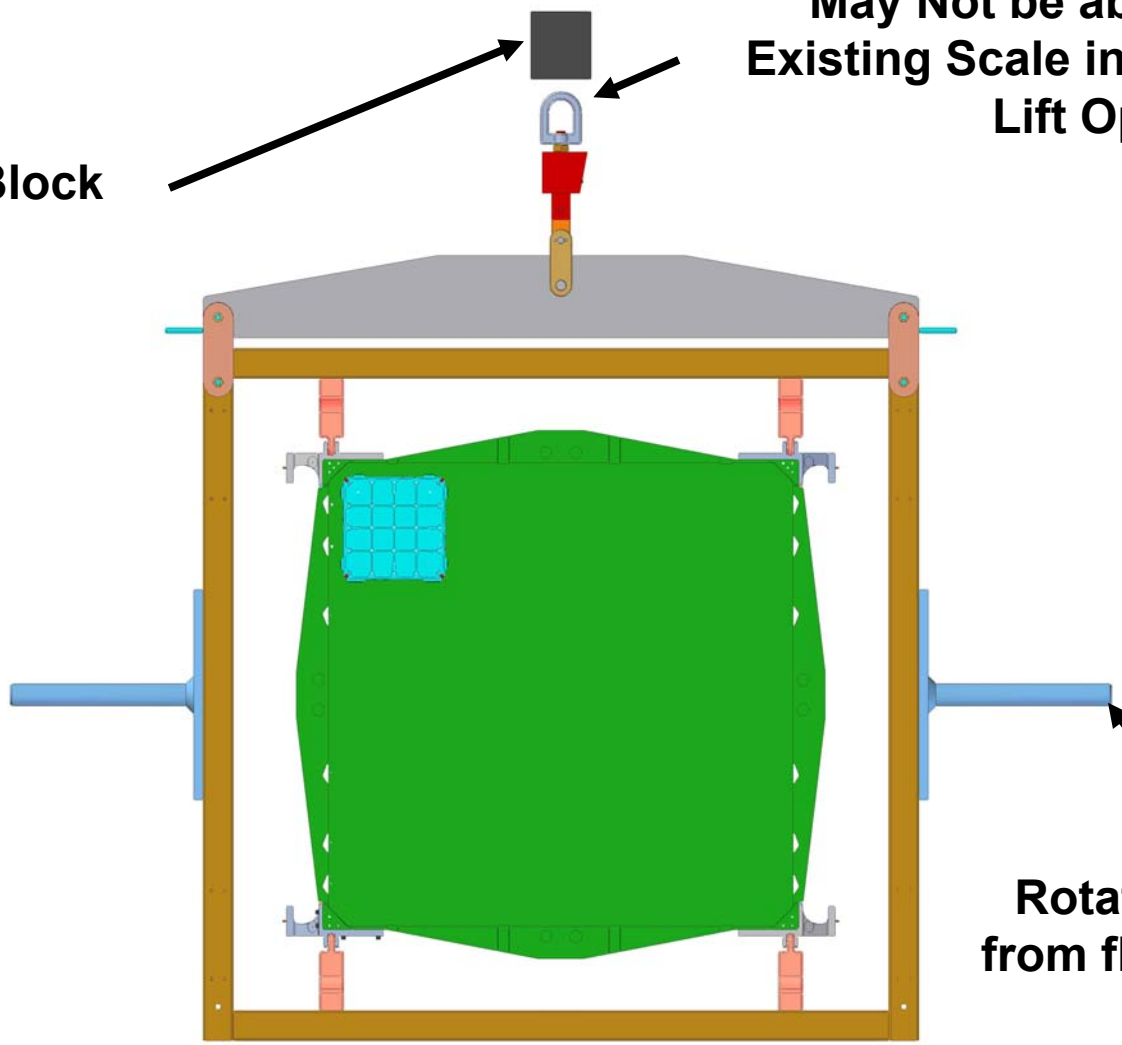

LAT MGSE Review – Details

- Personnel Access Platform { Interfaces to Rotation Stand Weldment)
  - Model Design 55% complete
  - Stress Analysis waiting for detailed design to mature (about 1-2 weeks from now)

- Proof test weights for LAT Lift Fixture, GPR, GPR to Grid brackets, Support Shaft Flange Assys and Rotation Stand
  - Concept stage; No detailed design as yet
  - Not viewed as a schedule impact problem if started soon

LAT MGSE Review – Details

- **Metrology Bay for Shimming E-Box Height with respect to CAL Grid Interface**
  - **Released and In Procurement**

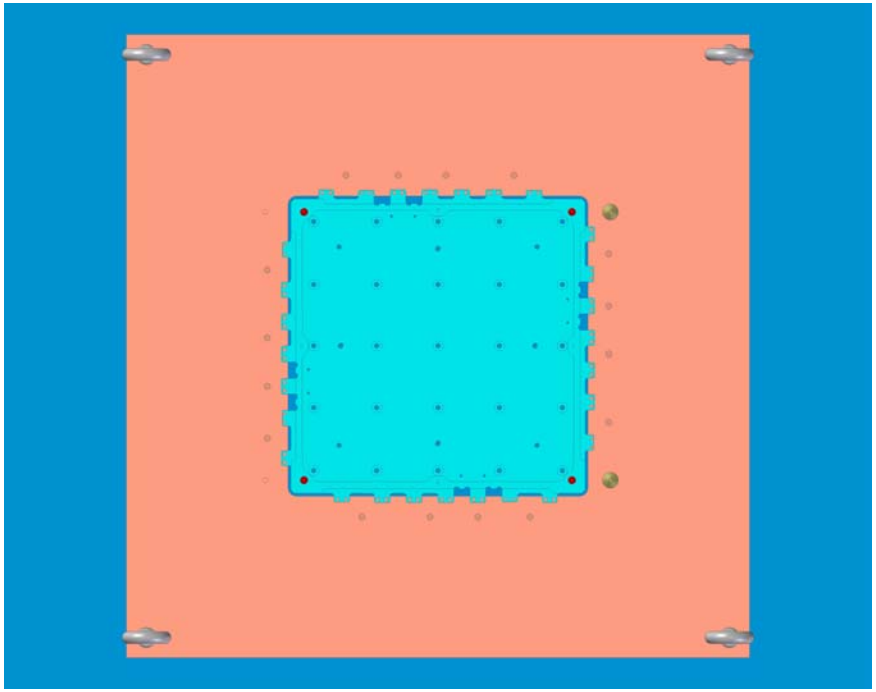

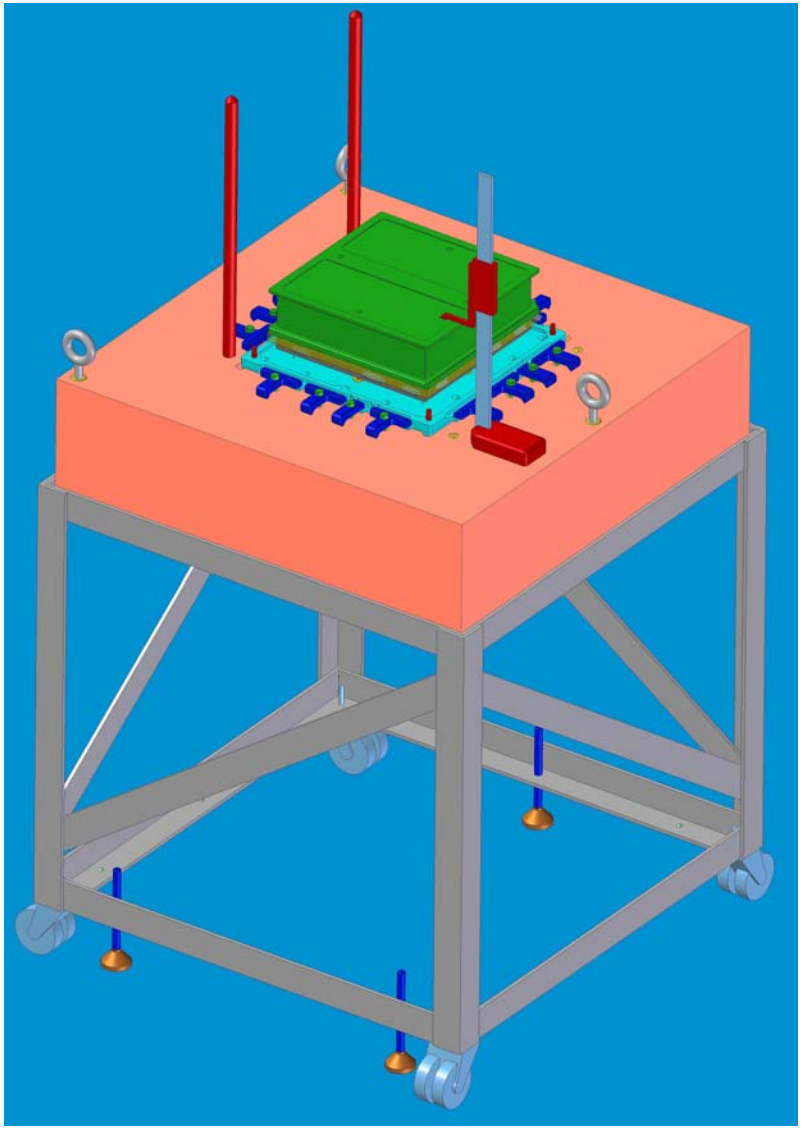

LAT MGSE Review – Details

- Z Axis Vertical Lift Fixture
  - Assembly of ACD onto LAT when LAT is in Rotation Stand
    - Not Possible with LAT +Z Up Lift Fixture
  - A-36 Solution provides enough hook height to remove LAT from Rotation Stand
    - Layout in work to determine if existing Crane Scale fits in loop
    - Layout in work to determine if LAT can be placed into LAT Transport Container
      - LAT Transport Container Vibration Isolation Analyses are nearing point of recommendation (Good Work Youssef !)

LAT MGSE Review- Fabrication Schedule

NEAR TERM MGSE	Orig Dur	Early Start	Early Finish
Formal Stress Analyses Reports	22	02/06/04*	03/09/04
Metrology Bay (included 2wks buffer)	32	02/09/04*	03/24/04
Grid Perimeter Ring & GPR to Grid Brac	65	02/11/04*	05/12/04
Drive Gear and Bearings	40	02/26/04*	04/21/04
4x4 Rotation Stand Weldment	56	02/26/04*	05/13/04
GPR Support Shaft - Flange Assys	54	03/01/04	05/13/04
Z-Axis Horizontal Lift Spreader	54	03/01/04	05/13/04
Proof Test Weights (4x4 Integration Hdw	50	03/05/04	05/13/04
Proof Test Weights Brackets (4x4 Int. H	50	03/05/04	05/13/04
1x4 Lift Fixture (also works for EM SB)	43	03/24/04	05/21/04
4x4 Lift Fixture	34	03/29/04	05/13/04
GSE Tower Mass Simulators	30	04/02/04	05/13/04
Personal Access Platform Weldment (St	25	04/09/04	05/13/04
Personal Access Platform Weldment (Al	25	04/09/04	05/13/04
LAT Rotation Stand Assembly and Proo	25	05/14/04	06/18/04
MGSE Complete for Integration Readine	0		06/07/04
Receive Tracker A RFI	0	07/13/04*	

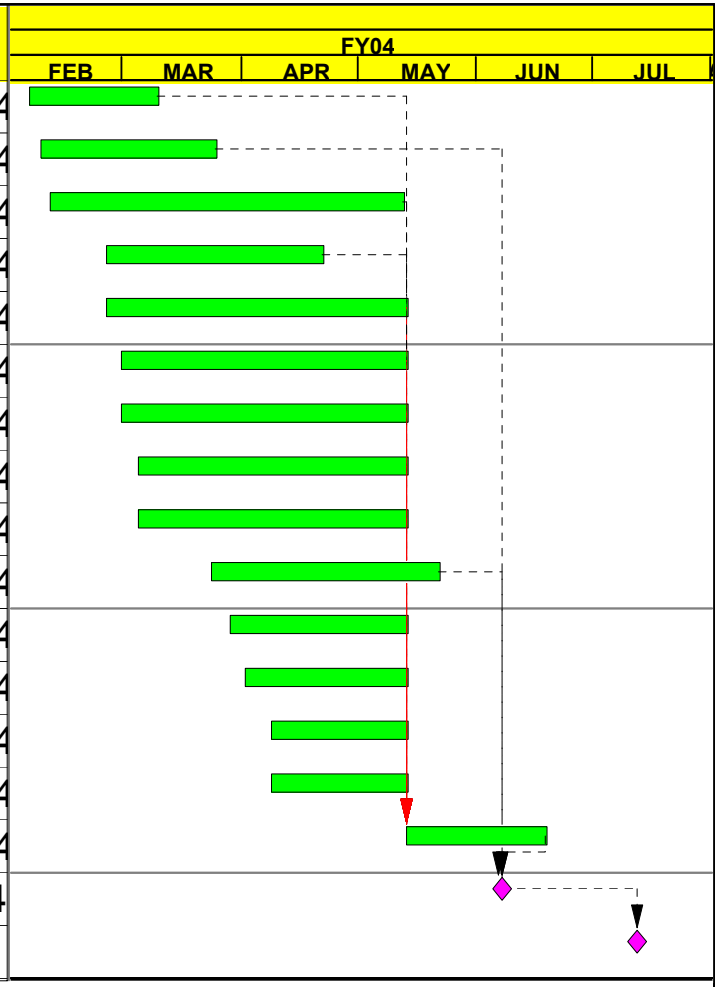

Summary

- Need Authorization to Proceed for:
  - Purchase of long lead items
    - GPR frame pieces
    - GPR to Grid attach bracketry
    - Support Shaft Materials and Machining
    - Bearings
    - Rotation Drive, Flex Coupling & Drive Motor
  - Rotation System Weldment
  - LAT Lift Spreaders
    - Z Axis Vertical (Analysis Report in work)
    - Z Axis Horizontal (Analysis Report in work)
  - Proof Test Hardware
    - Design to begin after GPR ATP

LAT MGSE Review – Additional Status

- Optional Use for 4x4 Integration Stand Sub-Assemblies
  - One end of Support Stand with Personnel Access Platform can be modified to Support Two Tower ESA Beam Test
    - Drive System would need position indication encoders and possibly stepper motors – driver electronics
    - ROM Cost estimate is ~ $25K Engineering and $30K for materials and Test Check-Out

Additional Status – Two TWR Test

Lowest Position

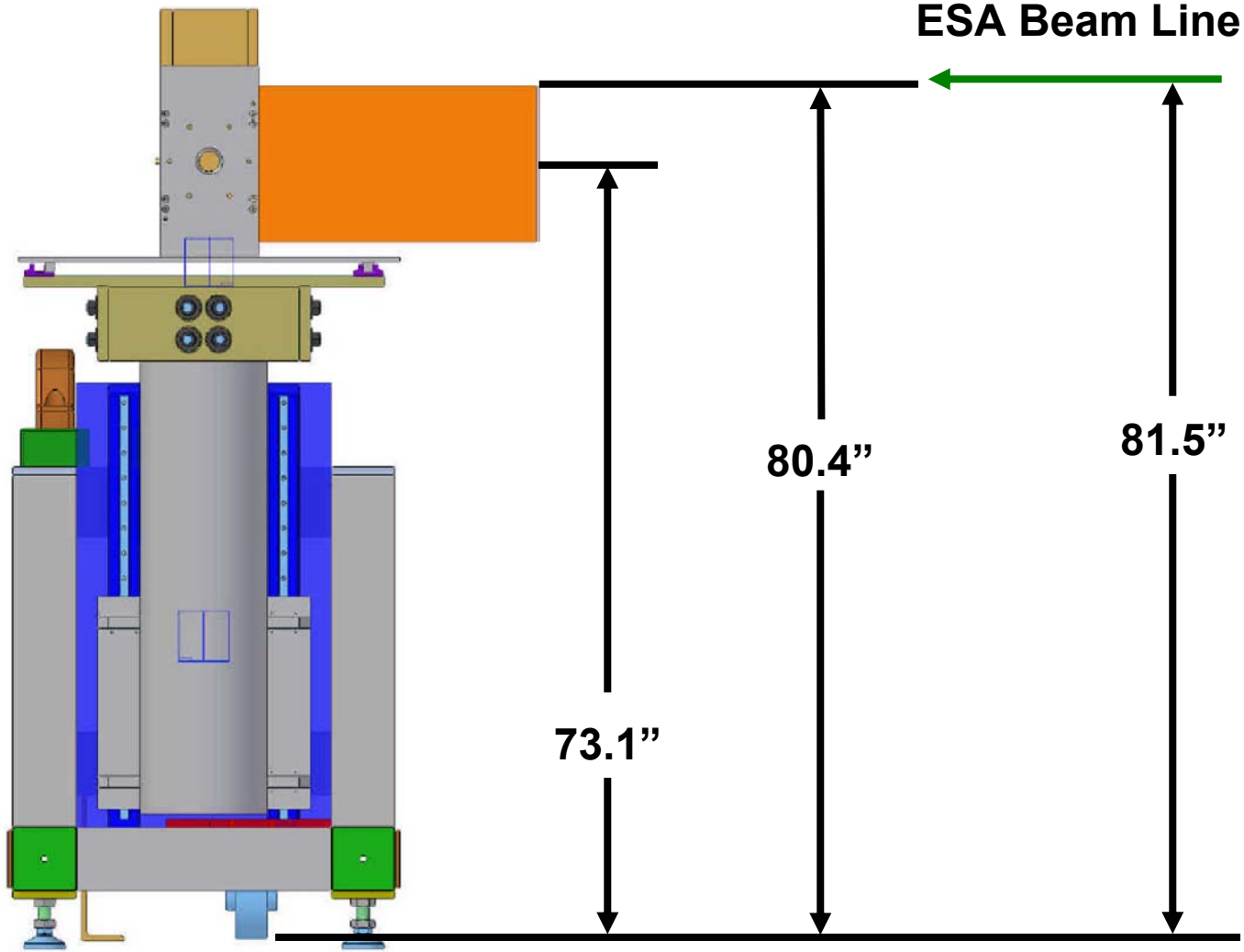

Additional Status – Two TWR Test

Highest Position

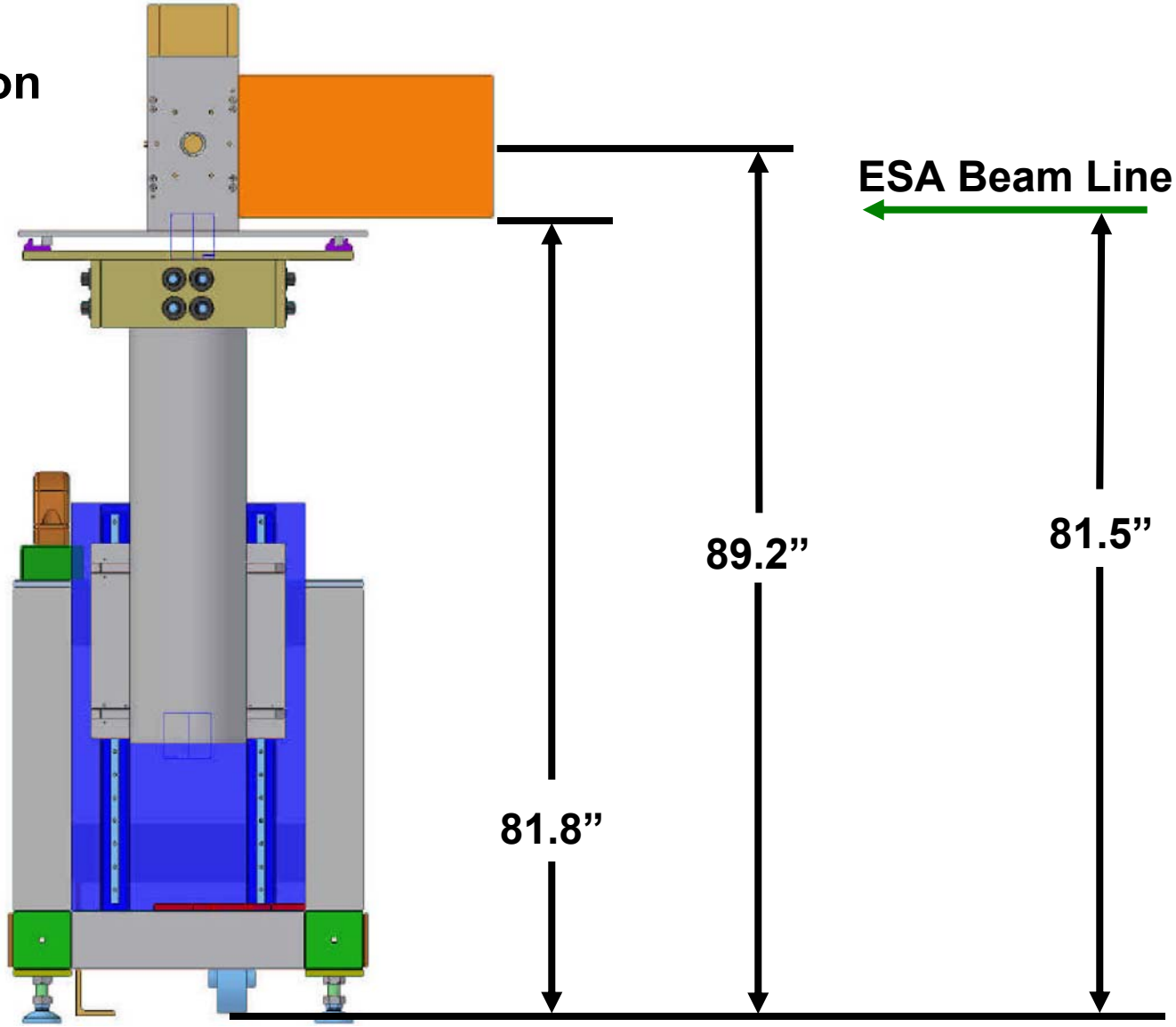

LAT MGSE Review – Additional Status

- Rotation Axis "Riser Block" Sub-Assys
  - Raises Rotation Axis by 27.25" to accommodate Rotating LAT with Radiators Installed after Acoustic Test (Used Only at NRL)
  - Needed if GSFC Provided Acoustic Test Stand Supports LAT with Z Axis Vertical
    - Prefer Z Axis Horizontal for Acoustic Test
    - Risky Op, " Do able, but Risky !!! "
  - Radiator Supports not started yet; not viewed as schedule impact

A Frame Stand with PAP, Small

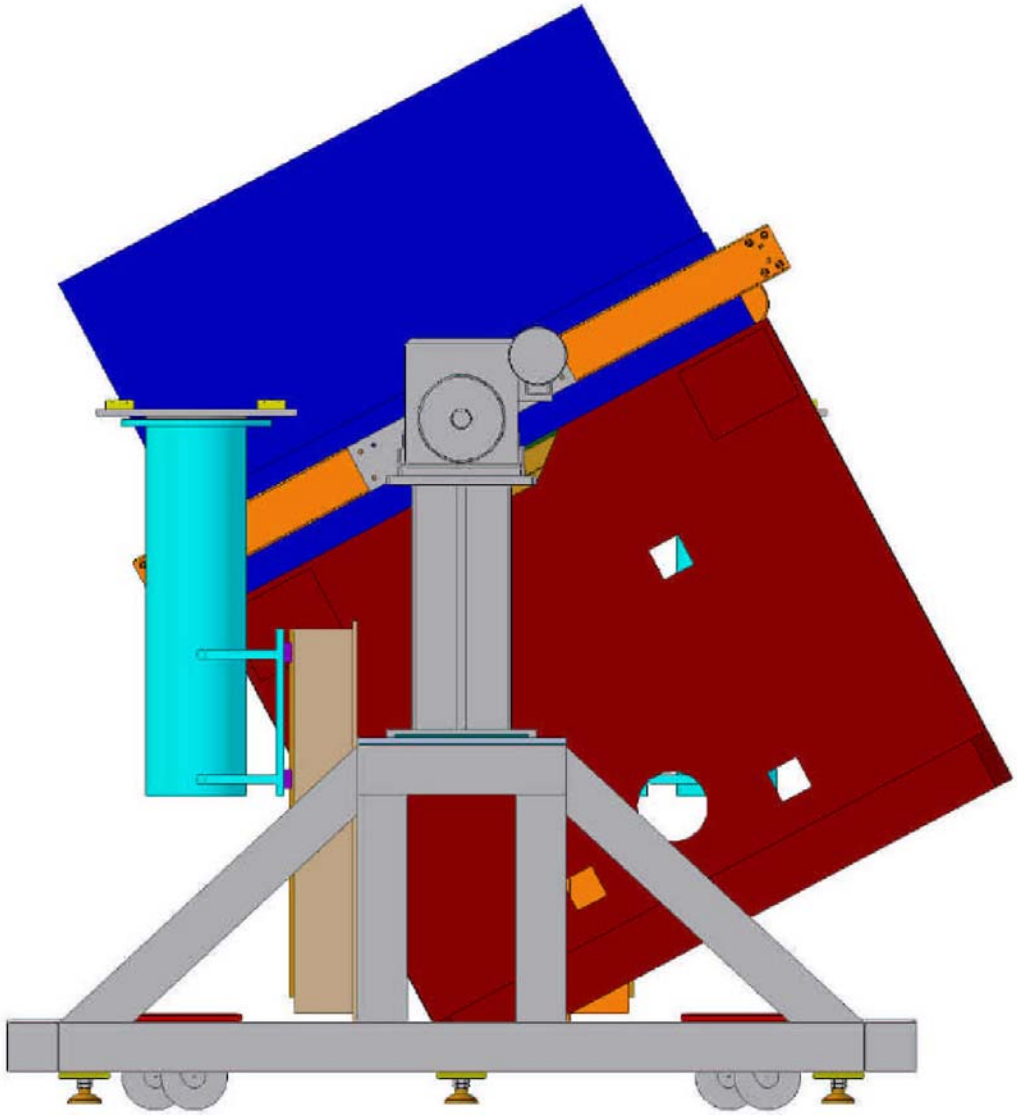

A Frame Stand with PAP, Small

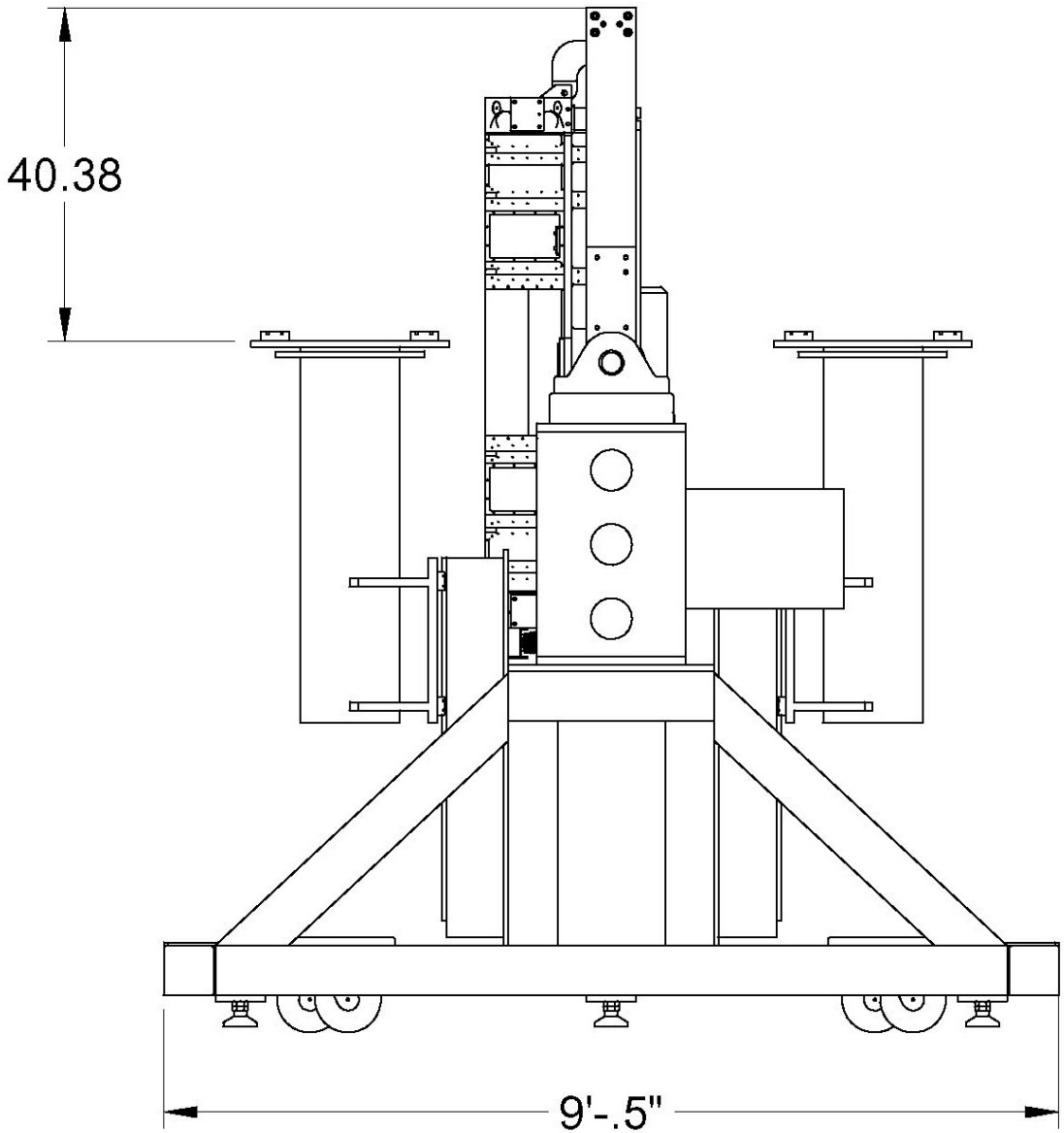

A Frame Stand with PAP, Small

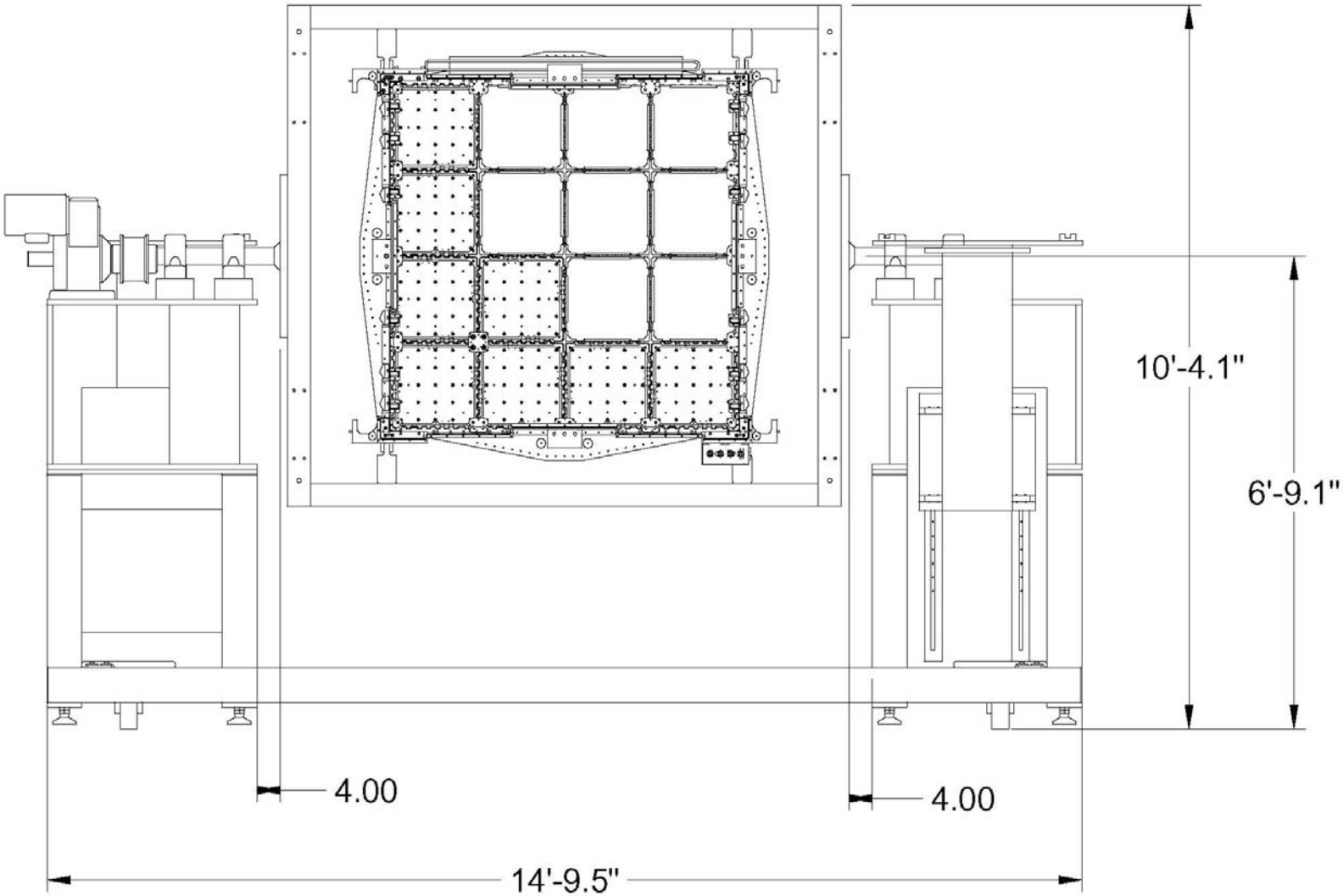

ACD Lift Operations Status

- ACD to LAT ICD, Doc No. LAT-SS-0363.3, Rev. Dated April 04, 2002
  - Indicates there shall be TBD inches clearance between ACD and TKR during integration
  - Indicates that the ACD Multi-Purpose Lift Sling (MPLS) provides > 300 mm [12”] clearance between load spreader apparatus and surfaces of ACD
  - Invokes ACD-Req-7002 against ACD MPLS

- ACD to LAT ICD, Doc No. LAT-SS-0363-04, Rev. Dated Sept. 04, 2002
  - Indicates there shall be 1 inches clearance between ACD and TKR during integration

- ACD to LAT ICD, Doc No. LAT-SS-0363-04, Rev. Dated Sept. 04, 2002
  - Indicates there shall be TBD inches clearance between ACD and TKR during integration

ACD Lift Point Detail

NOTES: UNLESS OTHERWISE SPECIFIED

1. ACD ASSEMBLY IS 2000 LBS.
2. LIFT FROM 4 CORNERS.
3. ACD ELECTRONICS COVERS MUST BE ON BEFORE A LIFT.
4. USE LOAD ON ANY TWO CORNERS AT ANY ONE TIME 1000 LBS EACH.
5. DO NOT ALLOW LIFTING DEVICE TO TOUCH SIDES OR TOP OF ACD.
6. ACD MUST VOLUME/LIFT SLING STAY CLEAN.
7. DATUM PER LAT MECHANICAL SYSTEMS ICD LAT-DS-05609.
8. STATIC LIFT VENDOR TYPICAL 4 PLACES.
9. A DYNAMIC LIFT CAPACITY MUST BE MORE THAN A 0.5" SINE ABOUT THE STATIC LIFT VECTOR.
10. ALL LIFTING HARDWARE SHALL COMPLY WITH THE ACD MGSE SPECIFICATION "ACD-MGS-0000".

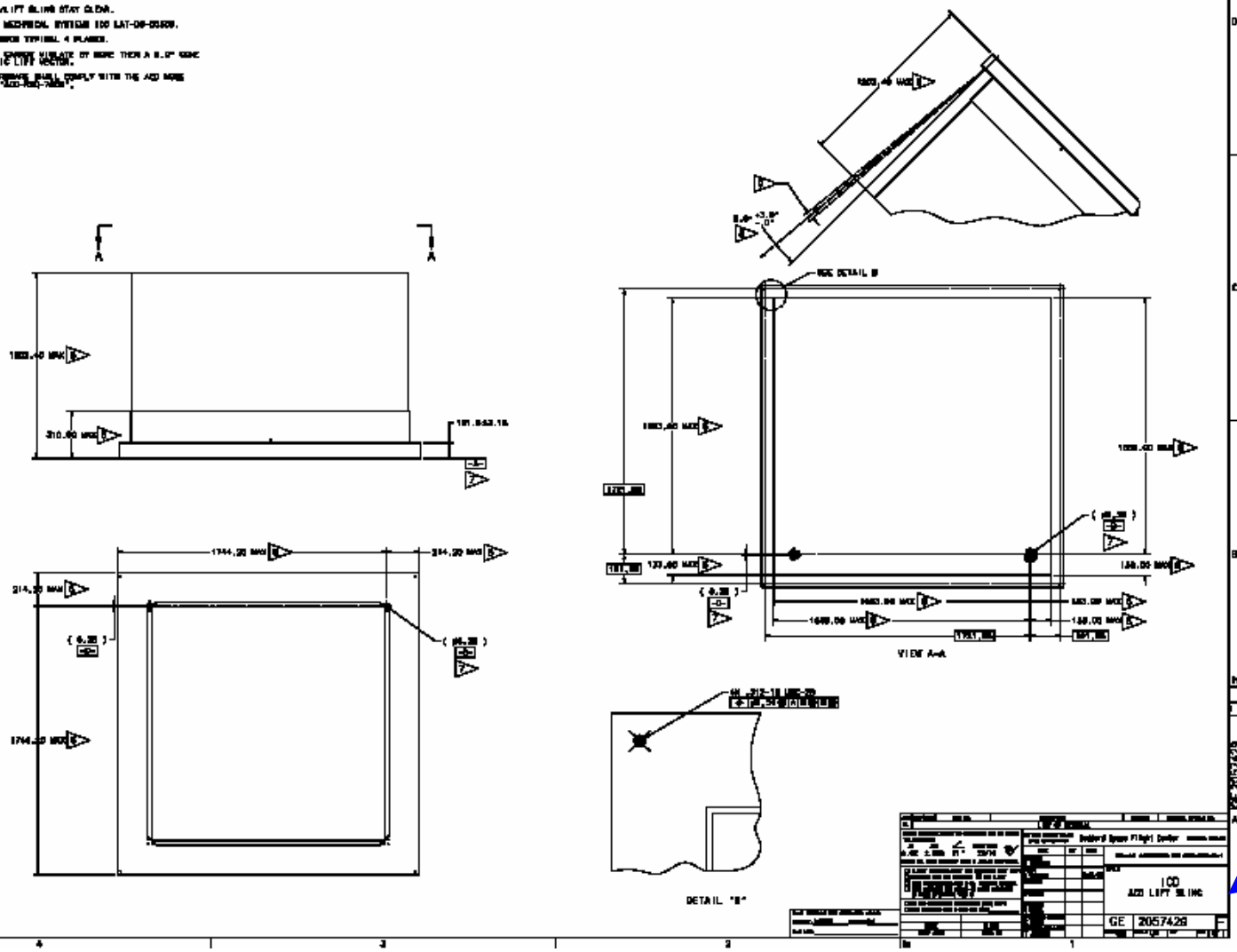

ICD, ACD Lift Sling; Dwg No 2057429, Rev -

ACD Lift Fixture to ACD Interface Clarification

ACD Low Profile Lift Spreader Concept

LAT With ACD To / From Rotation Stand

- SLAC needs clarification of Attach Interface to the ACD
- How does the ACD Provided Lift Interface attach to the ACD ?
- How does it come off ? Does it have a split seem to be able take it away from each side of the ACD, rather than a single lift over the top of the ACD ?

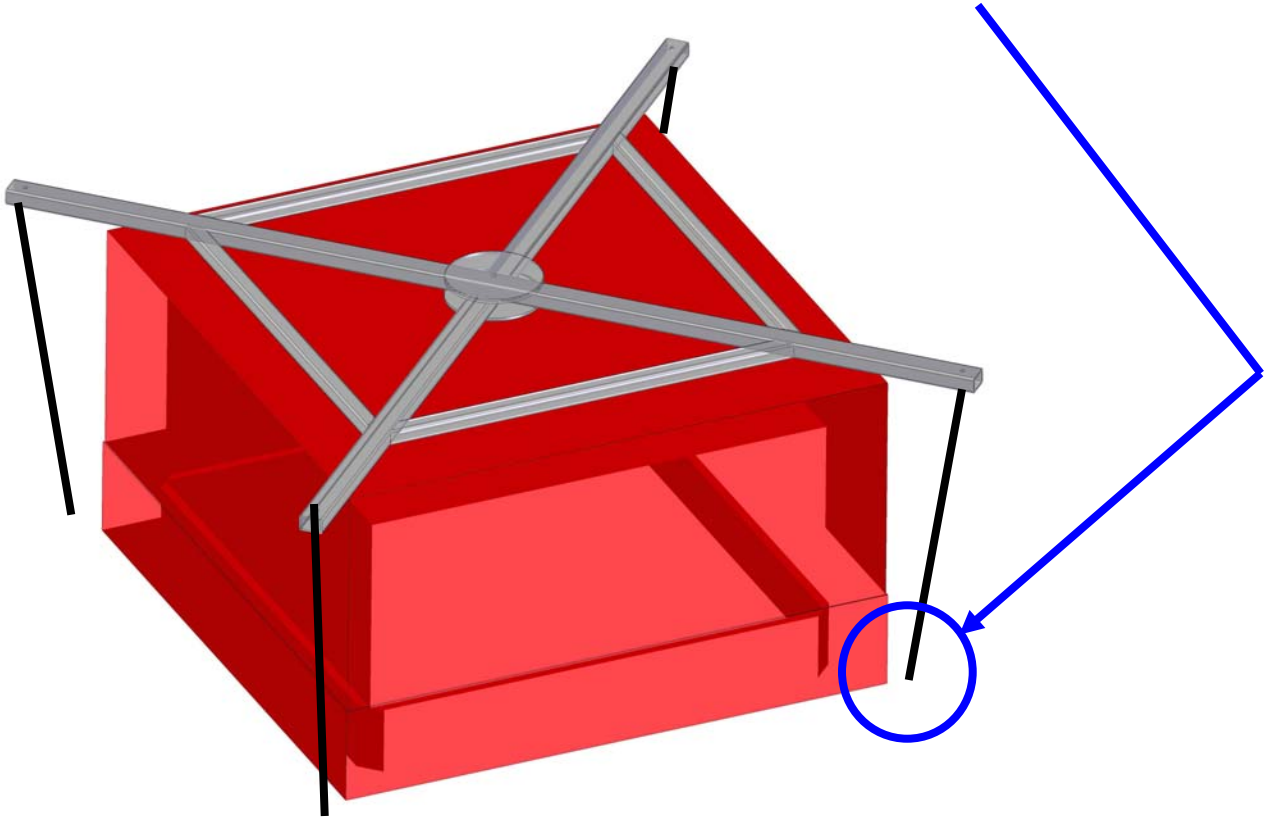

FYI Chart : ACD Lift Spreader Over TKR

- **Hook Height Remains a Problem, even with the Low Profile ACD Lift Spreader Concept**

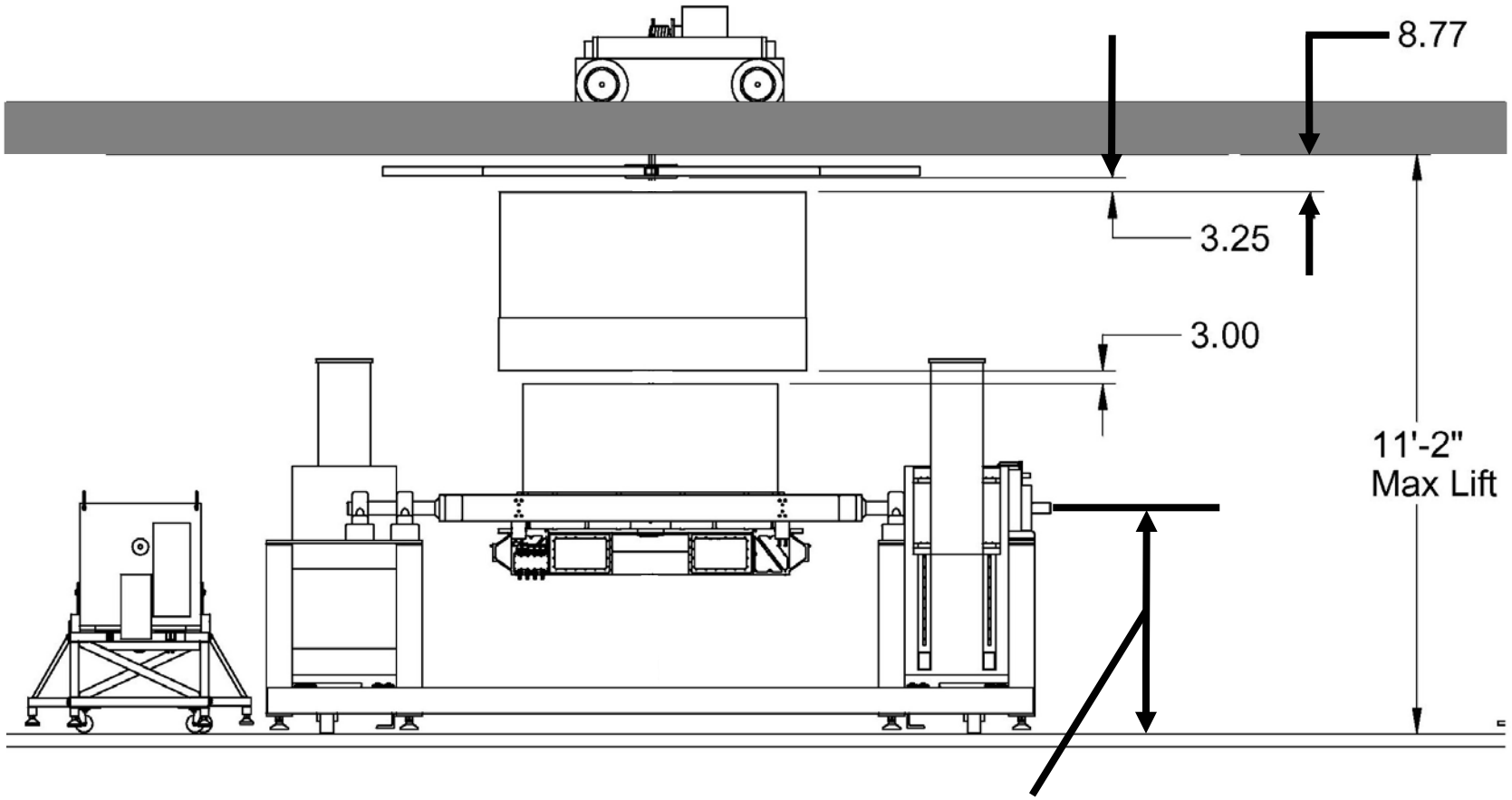

LAT Integration Stand Rotation Axis Remains 53" from Floor Surface

ACD Installation, Low Profile Integration Stand

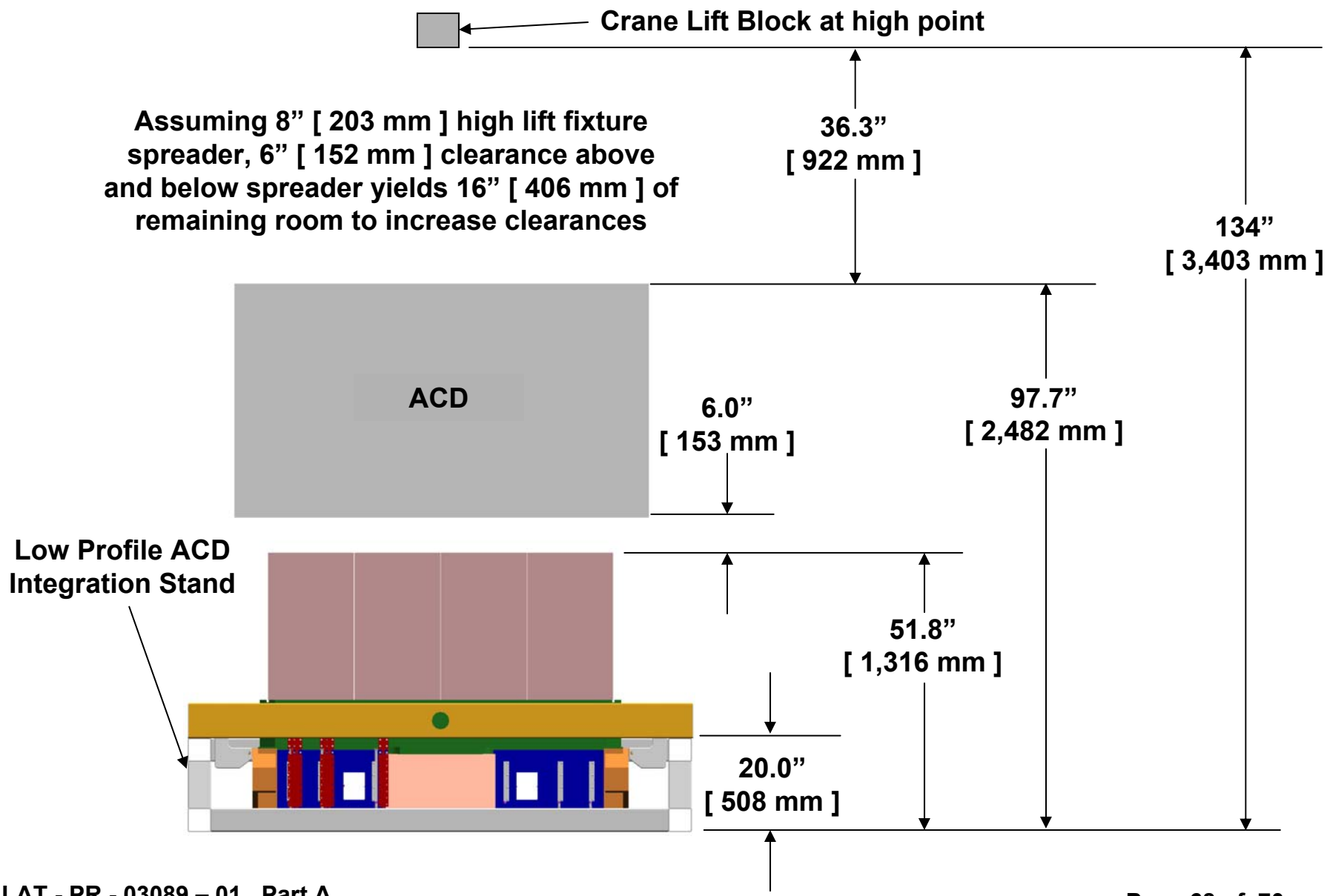

LAT With ACD To / From Rotation Stand

- Crane lift block maximum height is 134 inches [3,403 mm] (Hook removed)
  - No problem moving LAT to / from integration stand
  - 15” [381 mm] available room for clearance management
    - Can existing Crane Scale fit ?

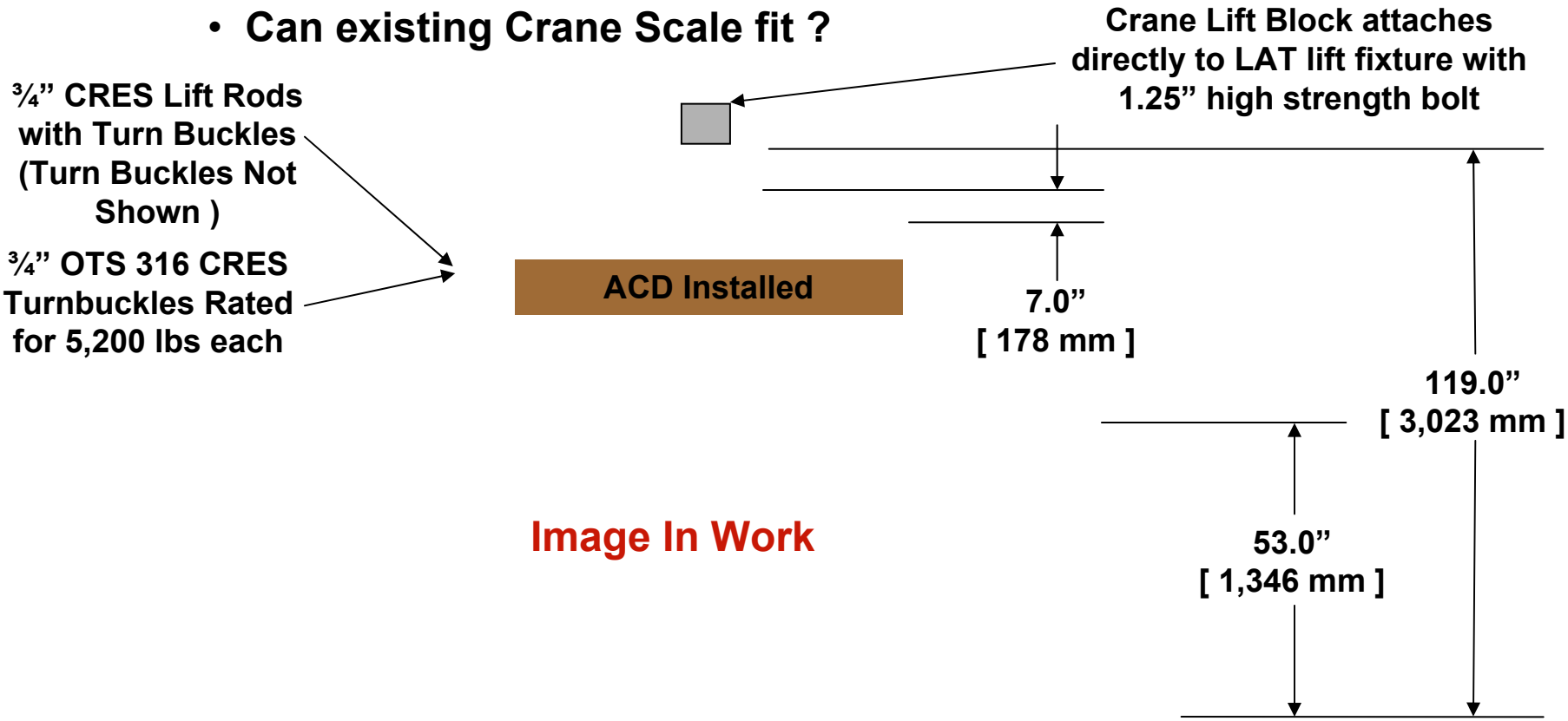

LAT Transport Container

- Design Philosophy
  - Attempting to fit in 88" Truck
    - Taller and more narrow version adds $20-30K for engineering and mass plate
  - Have a concept that works but requires additional ~ $20K for non-std truck width for cross-country ride to NRL
    - Isolation system appears satisfactory
      - Would like to reduce 1st harmonic to < 1 Hz for Cross-Country ride
      - Currently 1st harmonic is ~ 3.1 Hz (TBC)
- Work in progress
  - Layout is in work; may not be available this week
  - Vibration Report in review
    - First Iteration, expect another iteration for final design to follow (1 wk)
- Issues
  - Limited Modal Survey should be done
    - Limited Accels, use Proof Test Weight 1 (same as max LAT) and Air Ride Truck
    - Not a current budget line
    - Estimated cost : ~ $20K (TBC)

Environmental Test

- Vibration Test Fixture for Lumped Mass Test
  - Have SC to LAT Bracket Modeled; Looks Preliminary
    - We'll refer to them as the "Spider Leg SC Flexures"
  - Stress indicates 8 small interface brackets to NRL shaker will work
    - No need for $20K large interface plate
    - Interface Brackets are for Bounding Purposes Only !
      - Need Vibe Shaker interface bolt size and pattern from NRL

Environmental Test

- Vibration Test Fixture Interface Plates for Lumped Mass Test, Cont.

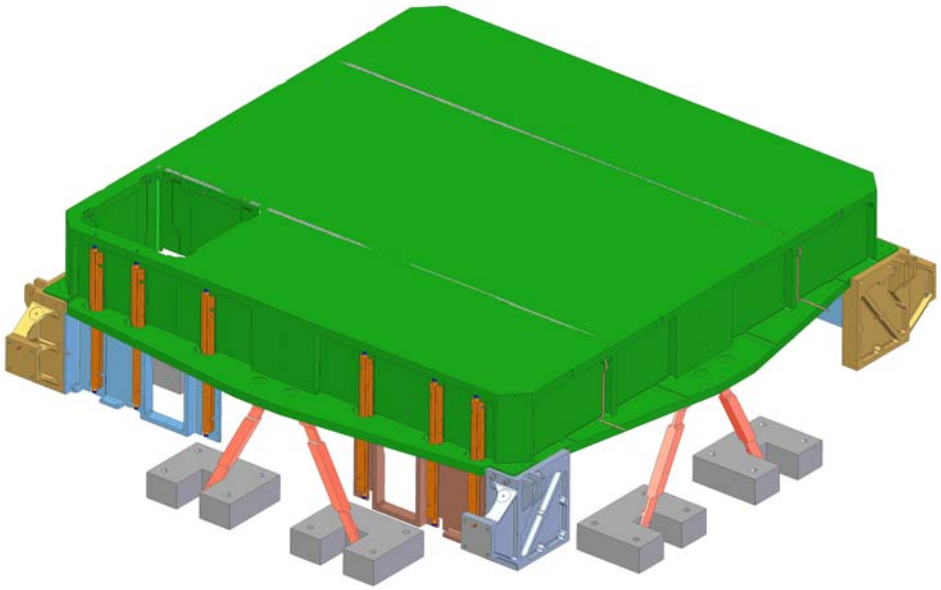

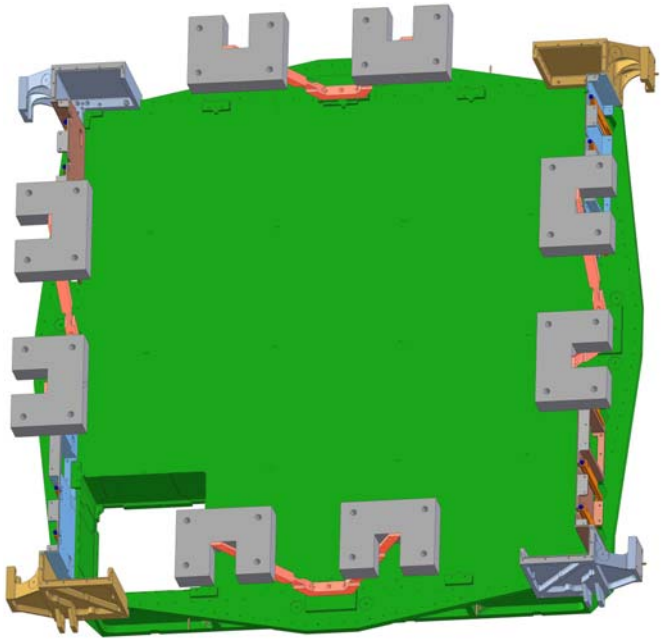

Environmental Test

- Vibration Test Fixture Interface Plates for Lumped Mass Test, Cont.

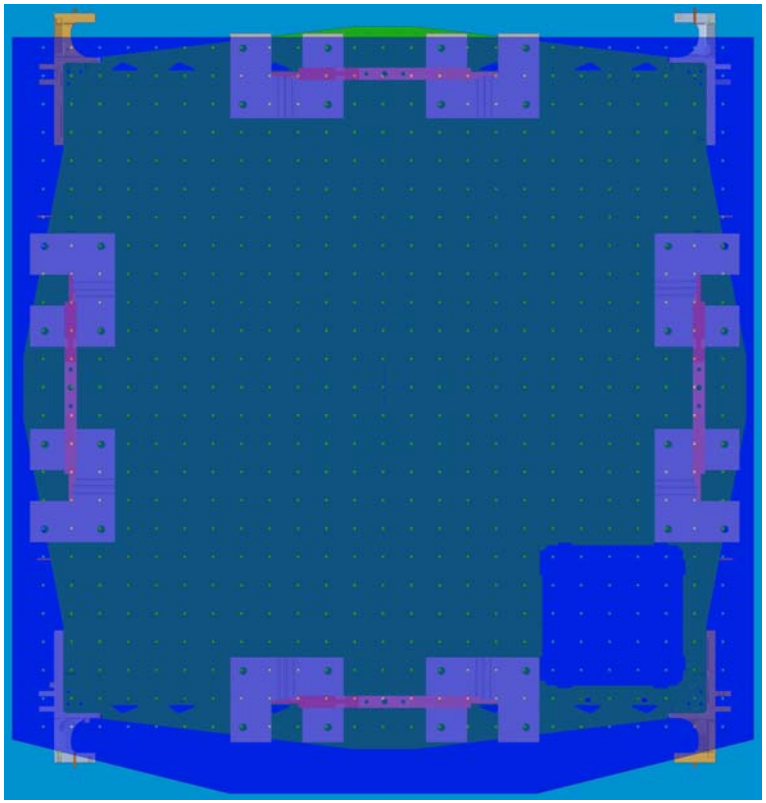

ACD Lift Operations Status

- **LAT CDR: CDR RFA 13 requests**
  - **6” clearance between ACD bottom surface and TKR top surface**
  - **6” clearance between ACD top surface and SLAC provided load spreader**